04/21/2026

CMA
RESTAURANT SUPPLY & DESIGN, INC.

Project:
Alaska Native Heritage Center Subsistence Kitchen

From:
CMA Restaurant Supply & Design, Inc.
Steve Gendreau
12811 NE 126th Place
Kirkland, WA 98034
425-747-7223
206-713-5785 (Contact)

To:
Alaska Native Heritage Center
Gregory Stewart
8800 Heritage Center Drive
Anchorage, AK 99504

CMA
RESTAURANT SUPPLY & DESIGN, INC.

Submittal Sheet

04/21/2026

ITEM# 1 - FLOOR TROUGH (1 EA REQ'D)

Pacific Stainless CUSTOM 48" X 8"

Floor Trough, 48"W x 8"D, removable stainless steel subway-style grating, 4" deep trough pan with built-in pitch toward drain, 3" I.P.S. x 3" drain tail piece (no hub connection), 14/304 stainless steel construction, NSF, Made in USA

ACCESSORIES

Mfr	Qty	Model	Spec
Pacific Stainless	1	FTBD	Optional Box Drain, Made in USA

Stainless Steel Floor Troughs - Stainless Steel Grating
Part # - FT####-SG

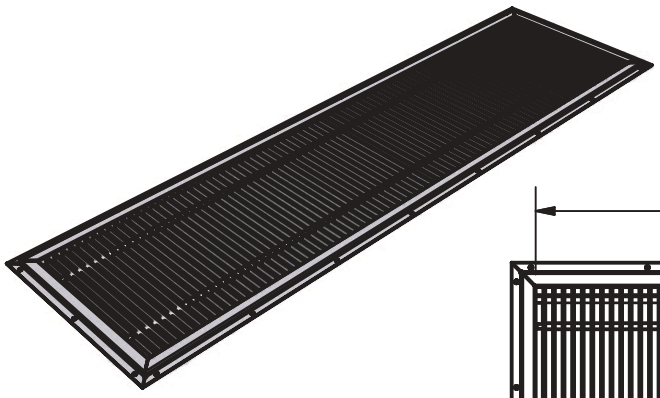

Item#: _____ Qty: ___

Model#: _____

NSF

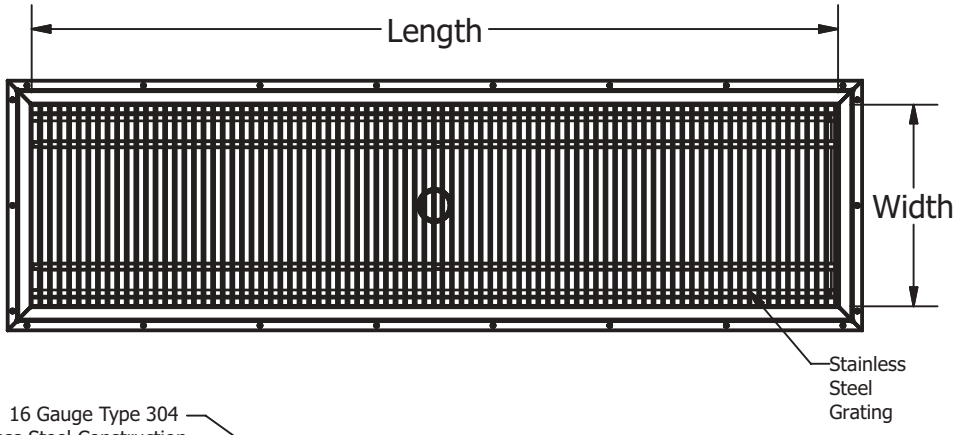

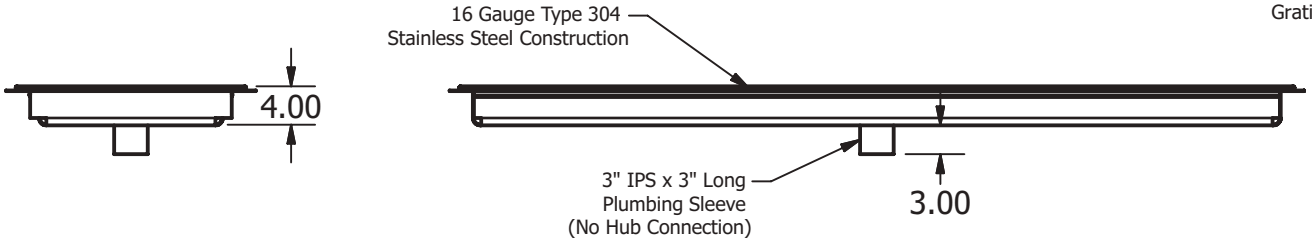

Features:

* 14 Gauge Type 304 Stainless Steel construction
* Stainless Steel grating
* Trough pitched toward drain
* 3" IPS x 3" Long plumbing sleeve (No Hub Connection)
* Available in Standard and Anti-Splash Designs

Options:



Description	Model Number	U/M
Anti-Splash Option	FTAS	Each



Description	Model Number	U/M
Optional Box Drain	FTBD	Installed



Description	Model Number	U/M
Optional Side Profile	FTOSP	Each

Description	Model Number
12 Gauge Upgrade Option	FTGO-12
14 Gauge, 316 Stainless Steel	FTUG-316SS-14
12 Gauge, 316 Stainless Steel	FTUG-316SS-12

Floor Troughs

Stainless Steel Grating - Trough Lengths (24” to 120”)

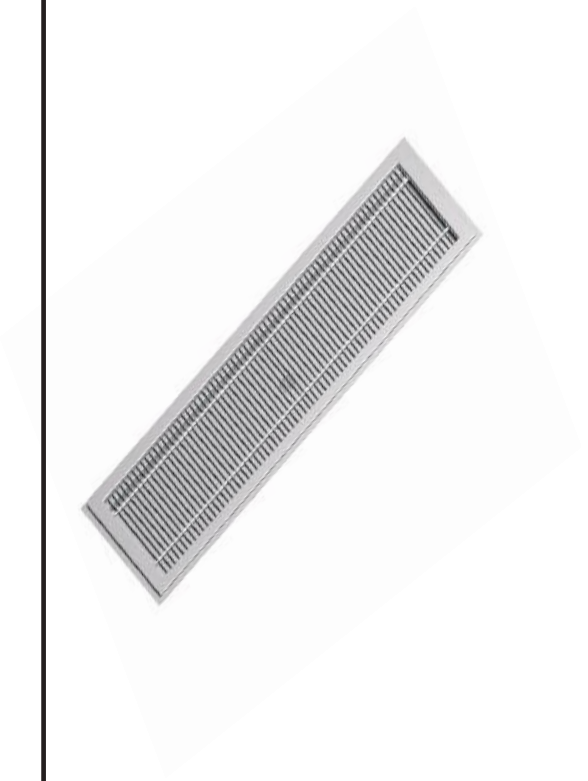

12” Wide

SIZE	MODEL
24” x 12”	FT 2412 -SG
30” x 12”	FT 3012 -SG
36” x 12”	FT 3612 -SG
42” x 12”	FT 4212 -SG
48” x 12”	FT 4812 -SG
54” x 12”	FT 5412 -SG
60” x 12”	FT 6012 -SG
66” x 12”	FT 6612 -SG
72” x 12”	FT 7212 -SG
78” x 12”	FT 7812 -SG
84” x 12”	FT 8412 -SG
90” x 12”	FT 9012 -SG
96” x 12”	FT 9612 -SG
102” x 12”	FT 10212 -SG
108” x 12”	FT 10812 -SG
114” x 12”	FT 11412 -SG
120” x 18”	FT 12012 -SG

18” Wide

SIZE	MODEL
24” x 18”	FT 2418 -SG
30” x 18”	FT 3018 -SG
36” x 18”	FT 3618 -SG
42” x 18”	FT 4218 -SG
48” x 18”	FT 4818 -SG
54” x 18”	FT 5418 -SG
60” x 18”	FT 6018 -SG
66” x 18”	FT 6618 -SG
72” x 18”	FT 7218 -SG
78” x 18”	FT 7818 -SG
84” x 18”	FT 8418 -SG
90” x 18”	FT 9018 -SG
96” x 18”	FT 9618 -SG
102” x 18”	FT 10218 -SG
108” x 18”	FT 10818 -SG
114” x 18”	FT 11418 -SG
120” x 18”	FT 12018 -SG

21” Wide

SIZE	MODEL
24” x 21”	FT 2421 -SG
30” x 21”	FT 3021 -SG
36” x 21”	FT 3621 -SG
42” x 21”	FT 4221 -SG
48” x 21”	FT 4821 -SG
54” x 21”	FT 5421 -SG
60” x 21”	FT 6021 -SG
66” x 21”	FT 6621 -SG
72” x 21”	FT 7221 -SG
78” x 21”	FT 7821 -SG
84” x 21”	FT 8421 -SG
90” x 21”	FT 9021 -SG
96” x 21”	FT 9621 -SG
102” x 21”	FT 10221 -SG
108” x 21”	FT 10821 -SG
114” x 21”	FT 11421 -SG
120” x 18”	FT 12021-SG

24” Wide

SIZE	MODEL
24” x 24”	FT 2424 -SG
30” x 24”	FT 3024 -SG
36” x 24”	FT 3624 -SG
42” x 24”	FT 4224 -SG
48” x 24”	FT 4824 -SG
54” x 24”	FT 5424 -SG
60” x 24”	FT 6024 -SG
66” x 24”	FT 6624 -SG
72” x 24”	FT 7224 -SG
78” x 24”	FT 7824 -SG
84” x 24”	FT 8424 -SG
90” x 24”	FT 9024 -SG
96” x 24”	FT 9624 -SG
102” x 24”	FT 10224 -SG
108” x 24”	FT 10824 -SG
114” x 24”	FT 11424 -SG
120” x 18”	FT 12024 -SG

Phone 888.618.2122 Fax 503.397.9596 E-mail info@pacificstainless.com

Pacific Stainless PRODUCTS, INC.

CMA
RESTAURANT SUPPLY & DESIGN, INC.

Submittal Sheet

04/21/2026

ITEM# 2 - WALK-IN COOLER (1 EA REQ'D)

Arctic

Walk in cooler, size and shape as per plan. Part of a combo walk in box.

White galvalum interior and exterior
SS door with diamond tread +36"
Vision window

See arctic shop drawings for additional specifications

<Incomplete>



Arctic®
WALK-IN COOLERS AND FREEZERS

Product Information

01 General Specifications

a. Walk-in coolers and freezers shall be of a modular design and construction utilizing prefabricated insulated panels with metal skins. The panels shall allow for rapid, easy field assembly, disassembly, and modification by adding or exchanging for like panels.

b. Assembly shall be accomplished by use of a standard hexagonal (Allen) wrench rotating a cam-action hook-arm on the tongue side of the panel over the pin on the groove side of the adjacent panel which pulls and locks the panels together creating an airtight and vapor proof joint. Access ports for rotating the hook-arm shall be on the inside of the cooler and these access ports shall be sealed with vinyl snap-in plugs after walk-in construction.

c. Standard wall, ceiling, and floor panels shall be 46", 34-1/2", 23", and 11-1/2" wide. Standard corner panels shall be 13" x 13" at 90°. Standard 4" wall and ceiling panels shall be available in any length from 1' 0" to 16' 0". Standard 5-3/8" wall and ceiling panels shall be available in any length from 1' 0" to 24' 0". Panels can be manufactured in increments of 1" to meet customers design specifications.

d. Arctic is certified and labeled to NSF Standard 7 and UL Standard 471. Arctic conforms to all EISA requirements and standards. Arctic is an approved manufacturer for the State of Oregon, City of Houston and LARR.

02 Panel Construction

a. Panels shall be constructed with interior and exterior metal skins formed to precise dimensions to ensure proper fit. Metal finish shall be as specified.

b. Wall panel frames shall be molded of high density urethane with mating tongue and groove profiles. Standard 4" panels shall have a wide 2-1/2" tongue throat and standard 5-3/8" panels shall have a wide 4-1/4" tongue throat to ensure vapor proof and airtight joints.

c. Floor and ceiling panel frames should be molded of high density urethane U-Channels to ensure structural strength and durability. Standard 4" panels shall have a wide 2-1/2" tongue throat and standard 5-3/8" panels shall have a wide 4-1/4" tongue throat to ensure vapor proof and airtight joints.

d. Panels shall have heavy-gauge steel panel fasteners constructed of a precisely located camlock and mating steel pin.

e. Panels shall have NSF approved vinyl gasket on the tongue edge of the panel. Gasket color shall be either gray, white, or black to most closely match the metal skin color.

f. Panel core foam shall be UL Listed, Class 1 fire rated, urethane foam permanently bonded to the interior and exterior metal skins. Each walk-in shall have a label on the door frame assembly indicating certification to ASTM STD E84/UL STD 723.

g. Standard panels shall be interchangeable. Special panels shall be sized to meet specific requirements.

h. Corners shall be constructed of a corner panel which incorporates the corner in the panel providing superior strength and structural integrity over butted corners.

i. Panels shall meet NSF STD 7 and be EISA compliant.

j. Panels can meet customer's specifications with angled walls, notches, corner cut outs and sloped ceilings.

03 Insulation

a. Insulation shall be 4" or 5-3/8" thick and shall be "foamed-in-place" to form a rigid insulation block that is permanently bonded to the interior and exterior metal skins.

b. Panel core insulation shall be CFC-free Class 1 fire rated urethane. The core insulation shall be classified to UL 723 (ASTM E84) with a flame spread ≤25 and a smoke density of <450.

c. Insulation shall have a K factor ≤0.125 BTU/hr/sq.ft. per °F/inch at 20°F and ≤0.138 BTU/hr/sq.ft. per °F/inch at 55°F in accordance with ASTM C518-2004. The R factor for 4" thick cooler panels is 28 and for freezers is 32. The R factor for 5-3/8" thick cooler panels is 39 and for freezers is 43.

04 Finish

a. Interior and exterior wall and ceiling finish options are virtually limitless and are tailored to the functional and artistic needs of each customer and project. The most common finishes are: 26 gauge stucco embossed galvalume, 26 gauge stucco embossed bright G-90 galvanized steel, 26 gauge white stucco embossed galvalume, 26 gauge white stucco embossed G-90 galvanized steel, 26 gauge smooth galvalume, 26 gauge smooth bright G-90 galvanized steel, .032" stucco embossed aluminum, .040" smooth white aluminum, and 22 gauge #4 finish 304 stainless steel. Please contact your Arctic Sale Representative for additional information on the wide variety of custom materials, finishes and embossments available.

05 Electrical

a. Wiring shall be concealed in the interior of the door frame and foamed-in-place to eliminate internal conduit runs and provide a more sanitary and aesthetically look.

b. Standard electrical services requirements are 120 volt, 60 cycle, 1-phase, 15 amp circuit. Please contact your Arctic Sales Representative for accommodation of other electrical service requirements.

c. The interior wiring shall extend out the top of the door frame for the primary electrical power connection. For indoor applications the ceiling panel will have a corresponding hole to align with the door frame electrical power. For applications with auxiliary lighting a switched auxiliary wire shall also extend out the top of the door frame.

d. Field wiring of the primary electrical power connection and auxiliary lighting shall be the customers responsibility and be performed by a qualified electrician to the National Electric Code and all applicable local standards. Field wiring typically involves mounting a junction box on the roof of the cooler and routing the provided interior wiring into the junction box. Auxiliary lighting is typically wired from the outside of the cooler with penetrations made by the electrician into the cooler interior for connection to the auxiliary lighting. All field wiring must be properly sealed to prevent air leakage and condensation inside of the conduit and auxiliary light fixtures.

e. Door frames shall be provided with an integral ultra-bright LED temperature display and light switch.

f. Door frames shall be provided with a vapor proof light fixture on the interior centered above the door. This fixture shall be either a LED fixture or an Edison style base socket.

g. Arctic can install concealed electrical wiring with receptacles mounted flush within the interior/exterior of panels for specific customer needs.

h. Arctic can install concealed copper cold water lines up to ½" diameter pipe for specific customer needs.

06 Hinged Doors

a. Doors shall be of in-fitting and of flush construction and bear a label indicating electrical certification to UL STD 471.

b. Doors available in bi-parting if requested.

c. Walk-in cooler door jambs shall be constructed of structural FRP pultrusions with mitered corners that are foamed-in-place to provide superior rigidity and prevent twisting and door sag.

All walk-ins are certified to NSF Std. 7 and UL Std. 471 by Intertek

d. Walk-in freezer door jambs shall be constructed of structural aluminum extrusions for freezers that are foamed-in-place to provide superior rigidity and prevent twisting and door sag.

e. Door plug frames shall be constructed of structural FRP pultrusions that are foamed-in-place to provide a flat door plug of accurate dimensions.

f. Door frame and plug insulation shall be the same as specified for the panels.

g. Door thresholds shall be 1/8" aluminum unless otherwise specified.

h. Standard door size shall provide for a 34" wide x 78" tall clear opening provided with two cam rise, spring loaded, chrome hinges. Hinges are fastened to two layers of 14 gauge galvanized steel backing foamed-in-place in the door frame and door plug.

i. Hinged door sizes of widths up to 6' 0" and heights up to 20' 0" can be provided. Additional hinges are provided as requested by the customer and as dictated by engineering requirements for larger doors.

j. Doors shall be provided with an NSF approved one-piece magnetic gasket for a positive seal.

k. Doors shall be provided with a butyl rubber gasket mounted to the bottom edge of the door.

l. Door handles shall be provided with a cylinder lock and an inside release. Multiple options available on request.

m. Doors that access ambient air conditions shall be provided with a vinyl strip curtain.

n. Freezer doors shall be supplied with a frame and threshold heater.

o. Freezer doors shall be supplied with a heated air vent.

p. In applications that require a kickplate, the plate shall be flush with the door metal and not include an overlay.

q. Optional features are available to meet customer and project requirements. Common optional features are heated and non-heated viewports, internal and external aluminum diamond plate or stainless

07 Sliding Doors

a. Doors shall be overhead mounted with two layers of ¾" exterior grade plywood backing foamed-in-place to provide a structural mounting location for sliding door hardware.

b. Door core foam shall be UL Listed, Class 1 fire rated, urethane foam permanently bonded to the interior and exterior metal skins. Each walk-in shall have a label indicating certification to ASTM STD E84/UL STD 723.

c. Doors shall be of a finish material selected by customer.

d. Door plug frames shall be constructed of treated 2" lumber.

e. Door gaskets shall be resilient flexible vinyl tested to ASTM STD E4257. Walk-in cooler floor gasket shall be of the single bulb sweeper type. Walk-in freezer gasket shall be of the dual sweeper type mounted in a "U" channel. Side and top gaskets shall be of the large bulb type and mounted to the inside perimeter of the door.

f. Pre-assembled one-piece trolley assembly features heavy extruded aluminum chassis with heavy-duty 3-1/2" diameter nylon-clad stainless steel ball bearing rollers. Built-in anti-lift feature and deep-seated rollers prevent derailing and provide stability.

g. Rail and track are rugged, corrosion resistant extruded aluminum for quick response and straight, sure tracking even with maximum door load.

h. Track ramps are tough, smooth acetal for long wear and easy sliding. "Down-and-in" action provides easier door operation, yet ensures a tight door seal in combination with the lower guide.

i. Micro-leveling feature allows for vertical door adjustment to maintain door seal, even where floors are uneven or after sweeper gasket is worn. Adjustment nuts are located up front for easy access.

j. Large exterior pull-handle of chrome plated, die-cast zinc and steel recessed inside pull handle shall be provided.

08 Floors

a. Floors are optional and when provided floor construction and insulation shall be the same as specified for wall panels.

b. Floors are rated to withstand a uniformly distributed stationary load of 1,200 per square foot. Heavy duty structural floors are available when specified. Please contact your Arctic Sale Representative for additional information.

c. Floor wear surface shall be smooth aluminum. Other floor wear surfaces are available and include but are not limited to 16 gauge 304 #4 finish stainless steel and aluminum diamond tread plate. Please contact your Arctic Sale Representative for additional information.

d. Ramp wear surfaces are 16 gauge stainless steel or aluminum diamond treadplate with a ½" wood backer foamed-in-place to structural cross supports.

e. NSF cove to be formed and foamed-in-place in floor panels.

f. Floorless walk-in coolers shall be provided with steel "U" channel and integral NSF 6" cove for field installation by customer both inside and out.

g. Cooler floor panels are available in thicknesses ranging from 2" to 5-3/8".

09 Closures and Trim

a. Matching ceiling closure panels and vertical trim strips for finishing between walk-in walls and building walls and building ceiling shall be supplied when specified and noted on the approved project drawings. Customer may select any style of custom configuration to meet job site needs.

10 Accessories

A wide array of optional accessories are offered to meet the exact customer and project requirements. Some of the more common accessories provided are:

a. Viewports (windows) on doors

b. Windows on walls

c. Reach-In doors; solid or glass

d. Aluminum and stainless steel bumper rails and hat channels.

e. 3-way light switches

f. A wide range of LED lighting options

g. Outdoor roof membrane packages, multiple colors.

h. Alarm systems (temperature, door ajar, panic alarm, etc.)

i. Alarm systems can be wired to multiple boxes, to a remote communicator for a connection to a customer is monitoring system.

j. Clear View single or bi-parting swing doors.

k. Foamed-in-place backing for attachment of shelving or other structural requirements

l. Doors positioned right up against the adjacent wall with zero jamb clearance.

m. Wide variety of glass reach-in doors in sizes and colors to meet customer specifications. Shelving and LED lights included.

n. Diamond Treadplate or Stainless Steel, 36" -48" wainscoting for interior or exterior installation to protect walls.

o. Cooler floor panels as thin as 2".

p. Corners at an angle ranging from 0 - 180°

q. Seismic engineered stamped drawings and seismic mounting components

r. Please contact your Arctic Sales Representative for accessories to meet your unique requirements.

11 Refrigeration

a. A comprehensive selection of refrigeration systems, air and water-cooled, in top mount self-contained, pre-assembled remote, and remote configurations are available to meet the exact customer and project requirements.

b. Evaporators that are of low profile, center mount, or medium profile with a maximum 70' throw. Coils can be manufactured with rust proof coating to meet customer's specific product needs.

12 Warranty

a. Panels shall include a 15-year performance warranty, doors and door assemblies shall include a 5-year materials and workmanship warranty, and refrigeration shall include a 1-year parts and labor warranty.

c. Warranty is only valid if walk-in and refrigeration is installed by a factory authorized installer incorporating ASHRAE standards and practices.

d. This is a warranty summary only. The actual walk-in warranty is governed by our complete warrant document which may be found at https://www.arcticwalkins.com/literature-3/miscellaneous/.

Please note that we have a continuous product development and improvement program which may result in change without notice to this specification.

CMA
RESTAURANT SUPPLY & DESIGN, INC.

Submittal Sheet

04/21/2026

ITEM# 3 - REMOTE REFRIGERATION SYSTEM (1 EA REQ'D)

Arctic

CONDENSING UNIT FOR WALK IN COOLER

<Incomplete>

BCH0008MCACYA0000 - SUBMITTAL

Project Name:	QUOTE R4122368	Project Location:	US
Quote ID:	R4123166	Item #:	2010
Submitted For:	-	Submitted On:	04/09/2026
Submitted By:	Rusty Brown	Submitted From:	-
Identity #:	-	Tag:	-
System Description:	Split system	System Tag:	Cooler

☐ For Record ☐ For Approval By:_____ Date:_____

General Product Information

Product Family:	HTS	Compressor Brand:	Copeland
Application:	Outdoor	Compressor Type:	Scroll
Temperature Range:	Medium Temp	Compressor Hp:	0.8
Voltage: (Volts/Ph/Hz)	208-230/3/60	Compressor Model:	YB07KAE
Refrigerant Type:	R454A	Number of Compressor(s):	1
Piping:	Standard	Coil Type:	Microchannel

Technical Information

Performance Data

Ambient Temperature (°F)	Saturated Suction Temperature (°F)	Application Capacity* (BTU/H)	Altitude (ft)	AWEF Value
95	23.18	7758.0	0	7.6

Electrical Data

Compressor(s)		Fan Motor(s)			Electric Ratings						
RLA	LRA	Quantity	Hp	FLA	Defrost Type	High or Low Amps?	Number of Contactors	MCA	MOPD	Evap.Fan Amps	Defrost Heater Amps
4.7	37.8	1	1/15	0.5	AIR DEFROST	-	-	15	15	5	15

Unit Specifications

Connections (in.)		Receiver 90% Full (lbs)		Fan Blade(s) Diameter (in)	Sound Data (dB)	Approx. Net Weight (lbs)
Liquid Line	Suction	Standard	Over Sized			
3/8	5/8	9	-	14	61	168

Dimensional Drawing(s)

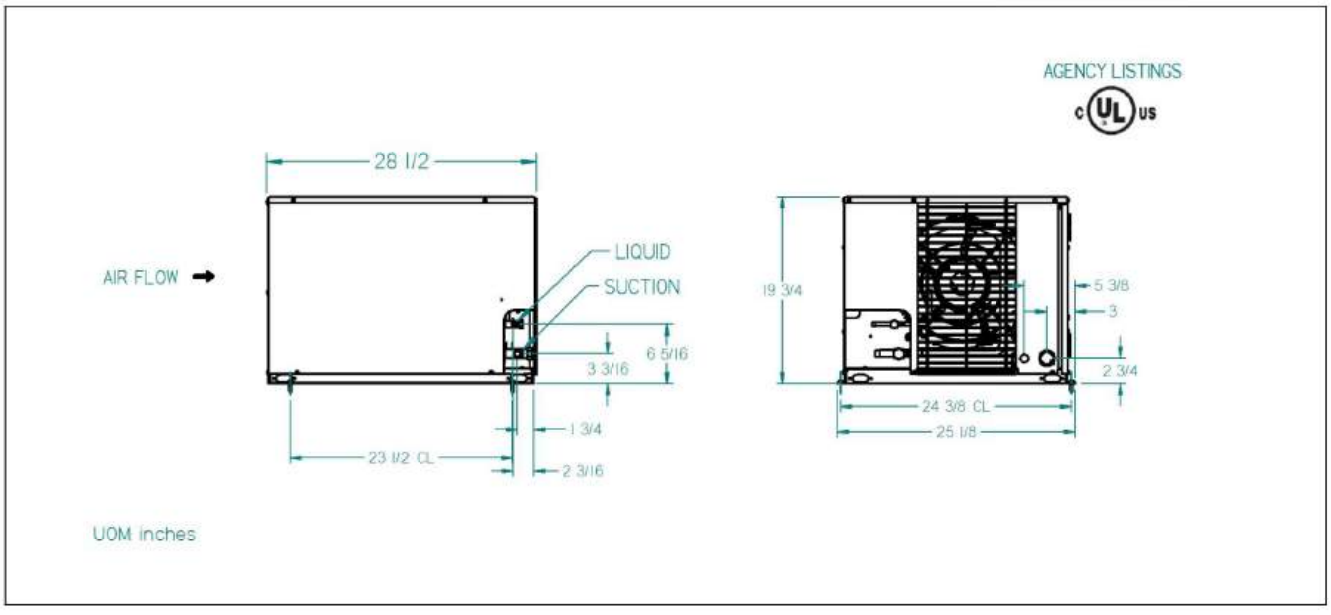

BCH0008MCACYA0000 - SUBMITTAL

Project Name:	*QUOTE R4122368*	*Project Location:*	*US*
Quote ID:	*R4123166*	*Item #:*	*2010*
Submitted For:	*-*	*Submitted On:*	*04/09/2026*
Submitted By:	*Rusty Brown*	*Submitted From:*	*-*
Identity #:	*-*	*Tag:*	*-*
System Description:	*Split system*	*System Tag:*	*Cooler*

Standard Features

CABINET AND CONSTRUCTION

- MICROCHANNEL COIL TECHNOLOGY STANDARD ON ALL UNITS
- PAINTED STEEL CABINETS FOR SUPERIOR STRENGTH AND CORROSION PROTECTION
- HEAVY DUTY, STEEL, 1-1/2" TALL BASE

SERVICEABILITY

- SUCTION SERVICE VALVES FOR HERMETIC AND SCROLL COMPRESSORS LOCATED OUTSIDE THE CABINET FOR QUICK INSTALLATIONS.
- RECEIVER WITH FUSIBLE PLUG, LIQUID SHUTOFF VALVE AND CHARGING PORT IS STANDARD
- LARGE ELECTRICAL PANEL FOR EASE OF ACCESS
- PREFABRICATED WIRING HARNESSES FOR TIGHT CRIMP CONNECTIONS AND CONSISTENT LABELING
- UNIT STAYS ON IF THE HOOD IS REMOVED FOR SERVICING
- SIGHT GLASS IS EASILY VIEWABLE

QUALITY

- ALL UNITS ARE COMPLETELY LEAK TESTED IN A HELIUM ENVIRONMENT, BUMP TESTED AND ALLOWED TO CYCLE OFF ON THE HIGH AND LOW PRESSURE CONTROL. EACH UNIT HAS A COPY OF THE RUN DATA SHIPPED INSIDE THE ELECTRICAL PANEL
- ELECTRICAL CIRCUITS ARE COMPLETELY CHECKED FOR CONTINUITY
- PIPING IS LAID OUT TO MINIMIZE STRESS AND VIBRATION AND IS PRE-BENT TO ELIMINATE LEAKS
- ENCAPSULATED, AUTO-RESET, HIGH AND LOW PRESSURE CONTROLS TO ELIMINATE LEAKS (ADJUSTABLE LOW PRESSURE CONTROL STANDARD)

Options

Mounted Options

- Preferred Package Code - A0000
- Motor - FIXED SPEED EC
- Receiver Options - STANDARD
- Liquid Line Options - FILTER DRIER AND SIGHT GLASS
- Discharge Line Options - HEAD PRESSURE VALVE 145#
- Fused Disconnect - NO FUSED DISCONNECT
- Crankcase Heater - CRANKCASE HEATER
- Snow Legs - NONE
- Brand Label - BOHN
- Coil Selection - MICROCHANNEL COIL
- Defrost Timer Options - NO TIMER
- Suction Line Options - SUCTION TUBE ONLY
- Cabinet Selection - Painted
- Pressure Options - ADJUSTABLE LOW - FIXED HIGH
- Phase Loss Monitor - NONE
- Hail Guard Factory Installed - NONE

Minimum Unit Clearances

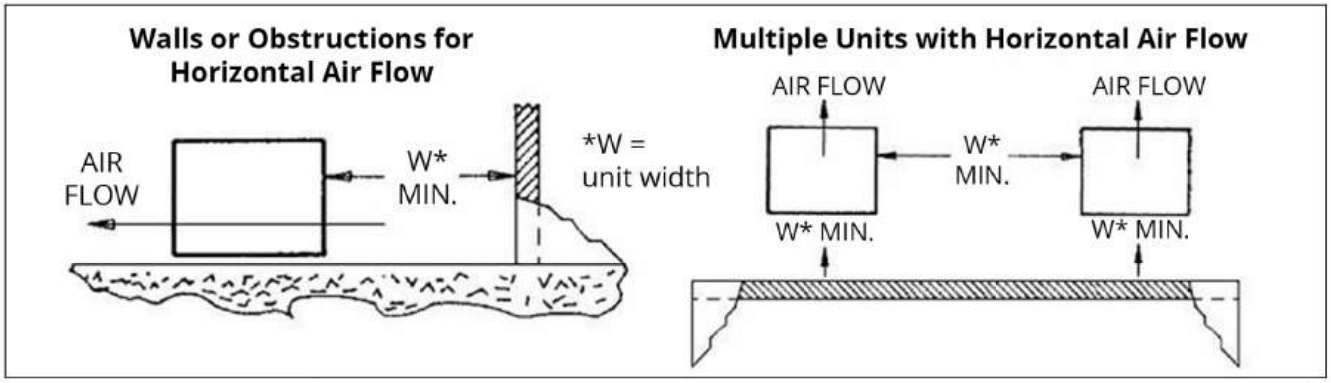

Notes

** Capacities shown are Application Capacities reflecting nominal operation at 10°F TD. For models within the scope of the DOE AWEF (Annual Walk-in Energy Factor) standard, the Net Capacity is determined by the AHRI 1250 test method. DOE will publish this compliance data at www.regulations.doe.gov*

** Units using A2L refrigerants must be installed in accordance with UL 60335-2-89 and ASHRAE 15 standard*

** Per ASHRAE Standard 15, fusible plugs and pressure relief valves may need to be externally piped when using flammable refrigerants*

**Only refrigerants in compliance with New York state regulations can be used in the state of New York.*

CMA
RESTAURANT SUPPLY & DESIGN, INC.

Submittal Sheet

04/21/2026

ITEM# 4 - COOLER EVAPORATOR COIL (1 EA REQ'D)

Arctic

Blower coil for inside of the walk in cooler

<Incomplete>

BEL0060AY6AMA - SUBMITTAL

BOHN

Project Name:	QUOTE R4122368	Project Location:	US
Quote ID:	R4123166	Item #:	2020
Submitted For:	-	Submitted On:	04/09/2026
Submitted By:	Rusty Brown	Submitted From:	-
Identity #:	-	Tag:	-
System Description:	Split system	System Tag:	Cooler

☐ For Record ☐ For Approval By:_____ Date:_____

General Product Information

Product Family:	BEL	Motor type	2 SPEED EC
Defrost Type:	Air	Number of Fans:	1
Voltage: (Volts/Ph/Hz)	115/1/60	Fan HorsePower	1/20
Refrigerant Type:	R454A	Fins per Inch	6
Minimum Room Area: (ft²)	23 (9.0ft height)	Mitigation Zone:	Volume

Technical Information

Performance Data

Capacity			Air Flow				Altitude (ft)	AWEF Value	
TD (°F)	SST (°F)	Application Capacity* (BTU/H)	CFM	Fan Diameter (in.)	Air Throw (ft)				
					Standard	w/Collar		Cooler > 32	Freezer <= 32
9.82	23.18	7,900	610	12	-	-	0	9	N/A

Electrical Data

Fan Motor(s)		Defrost Heater(s)		Drain pan Heater(s) HG	
Watts	Amps	Watts	Amps	Watts	Amps
55	0.85	-	-	-	-

Unit Specifications

Connections (in.)						Approx. Net Weight (lbs)
Coil Inlet	Suction	External Equalizer	Drain	Side Port	Hot Gas Drain Pan	
1/2	5/8	1/4	3/4	-	-	36

Dimensional Drawing(s)

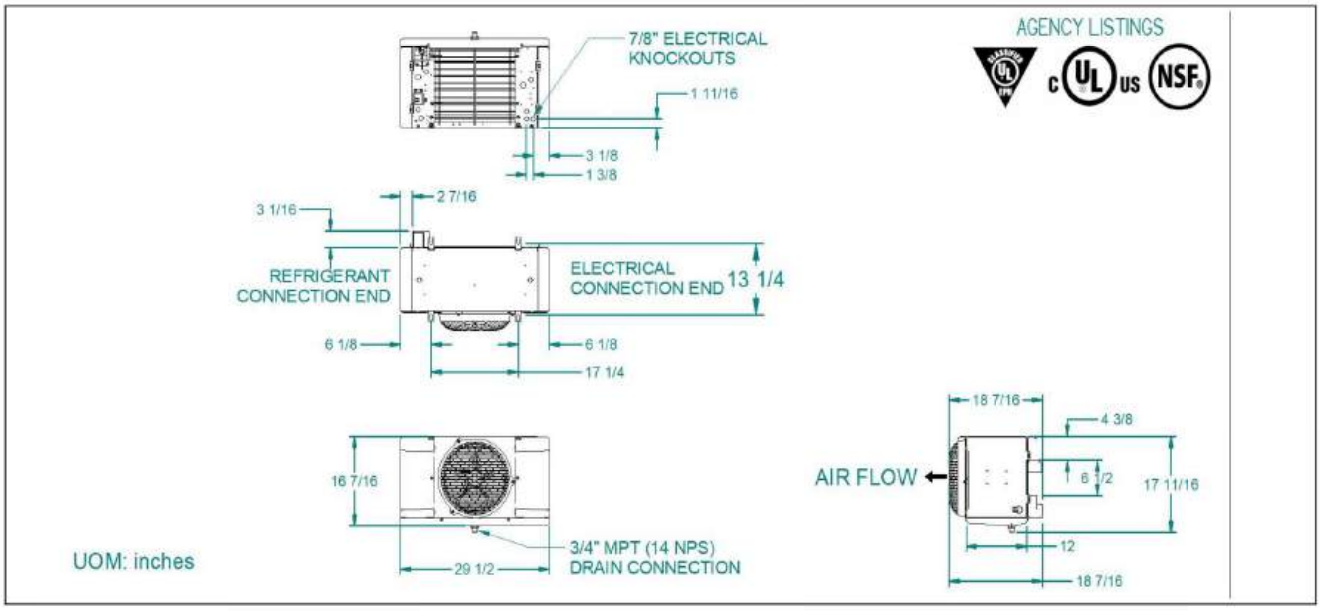

BELUGUA Y6AMA - SUBMITTAL

Project Name:	*QUOTE R4122368*	*Project Location:*	*US*
Quote ID:	*R4123166*	*Item #:*	*2020*
Submitted For:	*-*	*Submitted On:*	*04/09/2026*
Submitted By:	*Rusty Brown*	*Submitted From:*	*-*
Identity #:	*-*	*Tag:*	*-*
System Description:	*Split system*	*System Tag:*	*Cooler*

Standard Features

EASE OF INSTALLATION SERVICE

- ALL ELECTRICAL COMPONENTS FACTORY WIRED TO TERMINAL BOARD AND IDENTIFIED, MAKING IT EASY TO FIELD WIRE THE UNIT
- CABINET DESIGN FEATURES HINGED, REMOVABLE FRONT ACCESS PANELS ON EACH SIDE FOR EASY ACCESS TO ELECTRICAL AND REFRIGERATION COMPONENTS
- LIQUID LINE SOLENOID WIRE HARNESS IS FACTORY-INSTALLED FOR QUICK INSTALLATION
- MOTORS PLUG INTO WIRING HARNESS FOR EASIER SERVICING
- HINGED, REMOVABLE DRAIN PAN FOR EASY AND SAFE ACCESS
- PRE-DRILLED HOLES ON THE BACK OF THE UNIT FOR ROOM THERMOSTAT
- QUICK REMOVAL FAN GUARD/MOTOR ASSEMBLY FOR EASY SERVICE OR REPLACEMENT OF AIR MOVER PARTS

PERFORMANCE

- INTERNAL PANELS ARE ISOLATED FOR QUIET OPERATION
- INTERNALLY ENHANCED TUBING AND FIN DESIGN FOR HIGHER EFFICIENCY
- EC MOTORS STANDARD ON ALL MODELS FOR IMPROVED UNIT EFFICIENCY

RELIABLE DURABLE

- HEAVY GAUGE GRAINED ALUMINUM CABINET CLEANS EASILY AND LOOKS ATTRACTIVE
- MOLDED FAN GUARD AND ACCESS PANELS ARE MADE OF STRONG, DURABLE, AND NSF AND UL SANITATION RATED PLASTIC MATERIAL
- SWEAT CONNECTIONS TO REDUCE POTENTIAL FOR LEAKS

VERSATILE

- LARGE DIAMETER DRAIN HOLE (3/4 " ID) IS LOCATED TOWARDS THE BACK OF THE UNIT
- MINIMAL HEIGHT OF THE LOW PROFILE SERIES MAKES IT IDEAL FOR LOW CEILING COOLERS

Options

Mounted Options

- Brand Label - BOHN
- DTFD Option - None
- Fan Guard - Molded
- Drain Pan Type - Stucco
- Control Communication - YES
- Fin Material - Aluminum
- iNTELLIGEN WebServer/Multi-System Control Card Add on - NO
- Saturated Suction Temperature - 25
- Customer Specified Valve Type - EEV
- Refrigerant Detection System - Factory Installed
- Motor - 2 Speed EC
- Fan Blade - Standard
- Cabinet Type - Stucco
- Controller Option - Intelligen
- Defrost Control - None
- iNTELLIGEN Integration Card Add On - NO
- Coil Mechanical Option - Intelligen
- Liquid Temperature - 95
- Valve Family - L

Custom Options

Description	Quantity
WHITE CABINET	1

Shipped-Loose Options (Unit)

(QTY)Part Number - Description	(QTY)Part Number - Description
(1) 29338301 - VALVE-SOLENOID, 3/8 SSOV3S130 W COIL	(1) 29308801 - VALVE-CHECK, A2L, 1/2, CSOV-4S

Minimum Unit Clearances

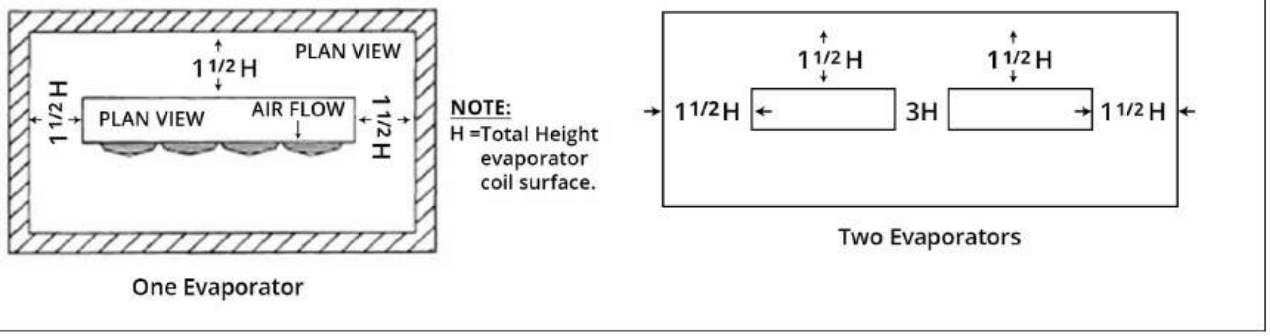

One Evaporator

Notes

** Capacities shown are Application Capacities reflecting nominal operation at 10°F TD. For models within the scope of the DOE AWEF (Annual Walk-in Energy Factor) standard, the Net Capacity is determined by the AHRI 1250 test method. DOE will publish this compliance data at www.regulations.doe.gov*

** Unit coolers using A2L refrigerants must be installed in accordance with UL 60335-2-89 and ASHRAE 15 standards*

CMA
RESTAURANT SUPPLY & DESIGN, INC.

Submittal Sheet

04/21/2026

ITEM# 5 - COOLER STORAGE SHELVING (3 EA REQ'D)

Metro PR-244274K3-S-4

Super Erecta Pro® Starter Unit, 24"W x 42"D x 74"H, (4) corrosion resistant shelves with removable polymer shelf mats, (4) bags of split sleeves, (4) posts, NSF

We put space to work.

Item # _____

Job _____

Super Erecta Pro® Starter and Add-on

Durable and Cleanable. The original — reinnovated.

Corrosion resistant shelving constructed of removable polymer open grid shelf mats over a wire shelf frame. Shelf has a rigid four-sided frame with center truss(es). Robust corner provides complete 360° capture of the split sleeves and post for added stability. Shelf frames and posts have Metroseal epoxy coating over an electroplated substrate. Shelves with polymer mats offer a 15 year limited warranty against corrosion, while posts offer a 12 year warranty against corrosion. Microban® antimicrobial product protection is built into the frames, shelf mats, and posts. Units assemble easily — shelves mount on split sleeves along grooved, numbered posts and adjust on 1" (25mm) increments.



Four Shelf Starter Model

- **Easy to order:** Order preconfigured shelving units under convenient model numbers.
- **Prolonged durability:** Polymer shelf mats are corrosion proof and impact resistant. They will not chip, rust, or corrode.
- **Easy to clean:** Removable polymer shelf mats can easily be lifted off the shelf frames for cleaning in sinks or wash/dish machines.
- **Strong and robust:** Steel corners, side and center supports assure a sturdy and stable weight bearing surface.

  Weight capacities for evenly distributed loads:
  800 lbs. (363kg) per shelf for lengths of 24" to 48" (610 to 1220mm)
  600 lbs. (275kg) per shelf for lengths of 54" (1370mm) or longer
  2,000 lbs. (907kg) maximum per unit.
- **Microban Product Protection:** Microban antimicrobial product protection is built into the shelf mats and the Metroseal 3 epoxy coating to protect the product from bacteria, mold, mildew, and fungus that cause odors and product degradation. Microban protection keeps the product “cleaner between cleanings”.
- **Efficient use of storage space:** Shelves can be adjusted at 1" (25mm) increments.
- **Open Grid Shelf Mats** promote air circulation and light penetration.
- **Fast, Easy Assembly:** Super Erecta Pro units assemble easily in minutes, without tools. SiteSelect posts have numbered grooves and feature unique double grooves every 8" (203mm) to help position the shelves.
- **Warranty against rust and corrosion:** Shelves with polymer shelf mats – 15 years. Posts – 12 years. Shelf mats are constructed of polypropylene and will never rust.



Four Shelf Add-on Unit (includes "S" hook brackets)



Material Specifications

- **Shelf frames:** Carbon steel with Metroseal 3 epoxy coating.
- **Polymer Shelf Mats:** polypropylene.
- Microban antimicrobial product protection is built into the polymer shelf mats and Metroseal 3 epoxy coating.
- NSF listed for all environments.
- **Continuous Temperature:** Super Erecta Pro Shelves can be used continuously within a range of -20/120° F (-29/49° C) with intermittent exposure to 200° F (93° C).

NOTE: Not suitable for cart wash applications.

MICROBAN PROTECTION THAT LIVES ON NSF Supports good HACCP processes

All Metro Catalog Sheets are available on our website: **www.metro.com**

InterMetro Industries Corporation
North Washington Street, Wilkes-Barre, PA 18705
Product Information. U.S. and Canada: 1.800.992.1776
Outside U.S. and Canada: www.metro.com/contactus

LO2-248 10/20

Information and specifications are subject to change without notice. Please confirm at time of order.

Copyright © 2020 InterMetro Industries Corp.

10.82

Super Erecta Pro® Hybrid Polymer/Wire Starter and Add-on

Job _____

Super Erecta Pro® Starter and Add-on

We put space to work.

4-shelf unit: Actual Height 74.875" (1902mm).

Nominal W x L			Approx. Pkd. Wt.			Approx. Pkd. Wt.	
in.	mm	Starter Model Number	lbs.	kg	Add-on Model Number	lbs.	kg
18x24	457x610	PR-182474K3-S-4	40.8	18.5	PR-182474K3-A-4	34.4	15.6
18x30	457x760	PR-183074K3-S-4	48.0	21.8	PR-183074K3-A-4	41.6	18.9
18x36	457x914	PR-183674K3-S-4	54.8	24.9	PR-183674K3-A-4	48.4	22.0
18x42	457x1060	PR-184274K3-S-4	61.6	27.9	PR-184274K3-A-4	55.2	25.0
18x48	457x1219	PR-184874K3-S-4	68.8	31.2	PR-184874K3-A-4	62.4	28.3
18x54	457x1370	PR-185474K3-S-4	76.0	34.5	PR-185474K3-A-4	69.6	31.6
18x60	457x1524	PR-186074K3-S-4	82.8	37.6	PR-186074K3-A-4	76.4	34.7
18x72	457x1829	PR-187274K3-S-4	96.0	43.5	PR-187274K3-A-4	89.6	40.6
21x24	530x610	PR-212474K3-S-4	48.0	21.8	PR-212474K3-A-4	41.6	18.9
21x30	530x760	PR-213074K3-S-4	54.8	24.9	PR-213074K3-A-4	48.4	22.0
21x36	530x914	PR-213674K3-S-4	61.6	27.9	PR-213674K3-A-4	55.2	25.0
21x42	530x1060	PR-214274K3-S-4	67.2	30.5	PR-214274K3-A-4	60.8	27.6
21x48	530x1219	PR-214874K3-S-4	74.0	33.6	PR-214874K3-A-4	67.6	30.7
21x54	530x1370	PR-215474K3-S-4	82.8	37.6	PR-215474K3-A-4	76.4	34.7
21x60	530x1524	PR-216074K3-S-4	90.0	40.8	PR-216074K3-A-4	83.6	37.9
21x72	530x1829	PR-217274K3-S-4	102.8	46.6	PR-217274K3-A-4	96.4	43.7
24x24	610x610	PR-242474K3-S-4	54.8	24.9	PR-242474K3-A-4	48.4	22.0
24x30	610x760	PR-243074K3-S-4	61.6	27.9	PR-243074K3-A-4	55.2	25.0
24x36	610x914	PR-243674K3-S-4	68.4	31.0	PR-243674K3-A-4	62.0	28.1
24x42	610x1060	PR-244274K3-S-4	72.5	32.9	PR-244274K3-A-4	66.1	30.0
24x48	610x1219	PR-244874K3-S-4	79.2	35.9	PR-244874K3-A-4	72.8	33.0
24x54	610x1370	PR-245474K3-S-4	90.0	40.8	PR-245474K3-A-4	83.6	37.9
24x60	610x1524	PR-246074K3-S-4	97.2	44.1	PR-246074K3-A-4	90.8	41.2
24x72	610x1829	PR-247274K3-S-4	110.0	49.9	PR-247274K3-A-4	103.6	47.0

Starter Units: consist of four open grid shelves and four posts.

Add-on Units: consist of four or five shelves, (2) posts, and S-Hook Brackets (2 per shelf).

Four tier units include (8) "S" Hook brackets.

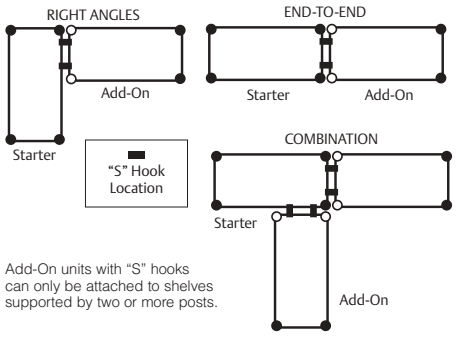

Add-On units with "S" hooks can only be attached to shelves supported by two or more posts.

Note: Actual width, add 1/8" (3.2mm) to nominal width. Actual Length, Subtract 1/8" (3.2mm) from nominal length.

4-shelf unit: Actual Height 61.8125" (1570mm)

Nominal W x L			Approx. Pkd. Wt.			Approx. Pkd. Wt.	
in.	mm	Starter Model Number	lbs.	kg	Add-on Model Number	lbs.	kg
18x24	457x610	PR-182463K3-S-4	38.8	17.6	PR-182463K3-A-4	33.4	15.1
18x30	457x760	PR-183063K3-S-4	46.0	20.9	PR-183063K3-A-4	40.6	18.4
18x36	457x914	PR-183663K3-S-4	52.8	23.9	PR-183663K3-A-4	47.4	21.5
18x42	457x1060	PR-184263K3-S-4	59.6	27.0	PR-184263K3-A-4	54.2	24.6
18x48	457x1219	PR-184863K3-S-4	66.8	30.3	PR-184863K3-A-4	61.4	27.9
18x54	457x1370	PR-185463K3-S-4	74.0	33.6	PR-185463K3-A-4	68.6	31.1
18x60	457x1524	PR-186063K3-S-4	80.8	36.7	PR-186063K3-A-4	75.4	34.2
18x72	457x1829	PR-187263K3-S-4	94.0	42.6	PR-187263K3-A-4	88.6	40.2
21x24	530x610	PR-212463K3-S-4	46.0	20.9	PR-212463K3-A-4	40.6	18.4
21x30	530x760	PR-213063K3-S-4	52.8	23.9	PR-213063K3-A-4	47.4	21.5
21x36	530x914	PR-213663K3-S-4	59.6	27.0	PR-213663K3-A-4	54.2	24.6
21x42	530x1060	PR-214263K3-S-4	65.2	29.6	PR-214263K3-A-4	59.8	27.1
21x48	530x1219	PR-214863K3-S-4	72.0	32.7	PR-214863K3-A-4	66.6	30.2
21x54	530x1370	PR-215463K3-S-4	80.8	36.7	PR-215463K3-A-4	75.4	34.2
21x60	530x1524	PR-216063K3-S-4	88.0	39.9	PR-216063K3-A-4	82.6	37.5
21x72	530x1829	PR-217263K3-S-4	100.8	45.7	PR-217263K3-A-4	95.4	43.3
24x24	610x610	PR-242463K3-S-4	52.8	23.9	PR-242463K3-A-4	47.4	21.5
24x30	610x760	PR-243063K3-S-4	59.6	27.0	PR-243063K3-A-4	54.2	24.6
24x36	610x914	PR-243663K3-S-4	66.4	30.1	PR-243663K3-A-4	61.0	27.7
24x42	610x1060	PR-244263K3-S-4	70.5	32.0	PR-244263K3-A-4	65.1	29.5
24x48	610x1219	PR-244863K3-S-4	77.2	35.0	PR-244863K3-A-4	71.8	32.6
24x54	610x1370	PR-245463K3-S-4	88.0	39.9	PR-245463K3-A-4	82.6	37.5
24x60	610x1524	PR-246063K3-S-4	95.2	43.2	PR-246063K3-A-4	89.8	40.7
24x72	610x1829	PR-247263K3-S-4	108.0	49.0	PR-247263K3-A-4	102.6	46.5





Reference: Super Erecta Pro uses Q9995Z "S" Hook bracket.

MICROBAN® and the MICROBAN® symbol are registered trademarks of the Microban® Products Company, Huntersville, NC. Microban® product protection does not by itself protect a user from food borne illness. Product must be routinely cleaned.

CMA
RESTAURANT SUPPLY & DESIGN, INC.

Submittal Sheet

04/21/2026

ITEM# 6 - BUN / SHEET PAN RACK (1 EA REQ'D)

John Boos ABPR-1820-3KD-X

Bun Pan Rack, mobile, (20) pan capacity, 3" spacing, front loading, 26"W x 20-1/2"D x 69"H, 1" square tube frame with bolted cross bracing, 5" swivel casters, 6063 aluminum construction, KD, NSF

ACCESSORIES

Mfr	Qty	Model	Spec
John Boos	1		Standard flyer accessories only, NO modifications to flyer items allowed or their accessories

John BOOS® SINCE 1887

SPEC SHEET

"ABPR-F-S" ALUMINUM MOBILE PAN RACKS

Front Load - Square Top Design

FEATURES:
- 6063 Aluminum 1" Square Tubing
- Bolted Cross Rails
- 3" Spacing - 20 Pan Capacity
- 5" Casters
- Knock Down - Bolt Together Construction

SPECIFICATIONS:
- Rack: 6063 Aluminum - MIG Welded

CERTIFICATIONS:

NSF



ABPR-1820-3KD

ACCESSORIES

MODEL	DESCRIPTION
ABPR-1820-PC	Clear Plastic Cover (Front Load Only)

"ABPR-F-S" ALUMINUM MOBILE PAN RACKS

MODEL	SIZE (L X W X H)	WT. LIMIT/RACK (LBS)	WT. LIMIT/PAN (LBS)	WEIGHT (LBS)
ABPR-1820-3KD	26"x20-1/2"x69"	200	10	30

ALL DIMENSIONS ARE TYPICAL. TOLERANCE +/- .500". JOHN BOOS & CO. RESERVES THE RIGHT TO CHANGE SPECIFICATIONS WITHOUT NOTICE.

DETAILED SPECIFICATIONS

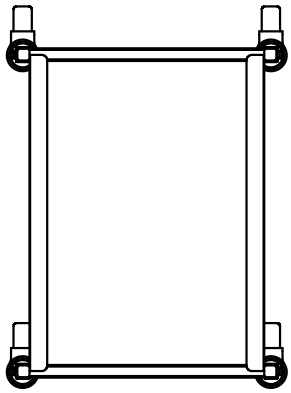

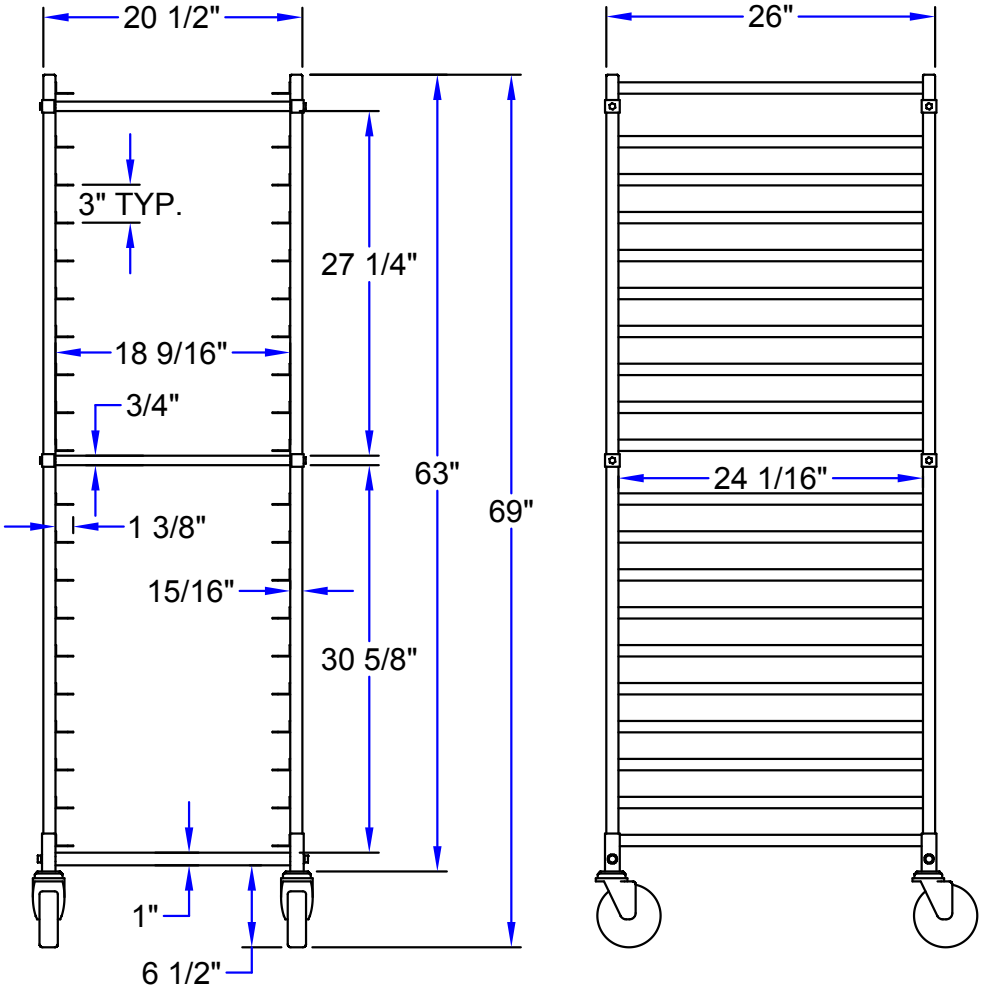

"ABPR-F-S" ALUMINUM MOBILE PAN RACKS

MODEL	SIZE (L X W X H)	WT. LIMIT/RACK (LBS)	WT. LIMIT/PAN (LBS)	WEIGHT (LBS)
ABPR-1820-3KD	26"x20-1/2"x69"	200	10	30

ALL DIMENSIONS ARE TYPICAL. TOLERANCE +/- .500". JOHN BOOS & CO. RESERVES THE RIGHT TO CHANGE SPECIFICATIONS WITHOUT NOTICE.

CMA
RESTAURANT SUPPLY & DESIGN, INC.

Submittal Sheet

04/21/2026

ITEM# 7 - WALK IN FREEZER (1 EA REQ'D)

Arctic

Size and shape as per plan.

White galvalum interior and exterior with vision window in door.

for more details see shop drawings

<Incomplete>



Arctic®
WALK-IN COOLERS AND FREEZERS

Product Information

01 General Specifications

a. Walk-in coolers and freezers shall be of a modular design and construction utilizing prefabricated insulated panels with metal skins. The panels shall allow for rapid, easy field assembly, disassembly, and modification by adding or exchanging for like panels.

b. Assembly shall be accomplished by use of a standard hexagonal (Allen) wrench rotating a cam-action hook-arm on the tongue side of the panel over the pin on the groove side of the adjacent panel which pulls and locks the panels together creating an airtight and vapor proof joint. Access ports for rotating the hook-arm shall be on the inside of the cooler and these access ports shall be sealed with vinyl snap-in plugs after walk-in construction.

c. Standard wall, ceiling, and floor panels shall be 46", 34-1/2", 23", and 11-1/2" wide. Standard corner panels shall be 13" x 13" at 90°. Standard 4" wall and ceiling panels shall be available in any length from 1' 0" to 16' 0". Standard 5-3/8" wall and ceiling panels shall be available in any length from 1' 0" to 24' 0". Panels can be manufactured in increments of 1" to meet customers design specifications.

d. Arctic is certified and labeled to NSF Standard 7 and UL Standard 471. Arctic conforms to all EISA requirements and standards. Arctic is an approved manufacturer for the State of Oregon, City of Houston and LARR.

02 Panel Construction

a. Panels shall be constructed with interior and exterior metal skins formed to precise dimensions to ensure proper fit. Metal finish shall be as specified.

b. Wall panel frames shall be molded of high density urethane with mating tongue and groove profiles. Standard 4" panels shall have a wide 2-1/2" tongue throat and standard 5-3/8" panels shall have a wide 4-1/4" tongue throat to ensure vapor proof and airtight joints.

c. Floor and ceiling panel frames should be molded of high density urethane U-Channels to ensure structural strength and durability. Standard 4" panels shall have a wide 2-1/2" tongue throat and standard 5-3/8" panels shall have a wide 4-1/4" tongue throat to ensure vapor proof and airtight joints.

d. Panels shall have heavy-gauge steel panel fasteners constructed of a precisely located camlock and mating steel pin.

e. Panels shall have NSF approved vinyl gasket on the tongue edge of the panel. Gasket color shall be either gray, white, or black to most closely match the metal skin color.

f. Panel core foam shall be UL Listed, Class 1 fire rated, urethane foam permanently bonded to the interior and exterior metal skins. Each walk-in shall have a label on the door frame assembly indicating certification to ASTM STD E84/UL STD 723.

g. Standard panels shall be interchangeable. Special panels shall be sized to meet specific requirements.

h. Corners shall be constructed of a corner panel which incorporates the corner in the panel providing superior strength and structural integrity over butted corners.

i. Panels shall meet NSF STD 7 and be EISA compliant.

j. Panels can meet customer's specifications with angled walls, notches, corner cut outs and sloped ceilings.

03 Insulation

a. Insulation shall be 4" or 5-3/8" thick and shall be "foamed-in-place" to form a rigid insulation block that is permanently bonded to the interior and exterior metal skins.

b. Panel core insulation shall be CFC-free Class 1 fire rated urethane. The core insulation shall be classified to UL 723 (ASTM E84) with a flame spread ≤25 and a smoke density of <450.

c. Insulation shall have a K factor ≤0.125 BTU/hr/sq.ft. per °F/inch at 20°F and ≤0.138 BTU/hr/sq.ft. per °F/inch at 55°F in accordance with ASTM C518-2004. The R factor for 4" thick cooler panels is 28 and for freezers is 32. The R factor for 5-3/8" thick cooler panels is 39 and for freezers is 43.

04 Finish

a. Interior and exterior wall and ceiling finish options are virtually limitless and are tailored to the functional and artistic needs of each customer and project. The most common finishes are: 26 gauge stucco embossed galvalume, 26 gauge stucco embossed bright G-90 galvanized steel, 26 gauge white stucco embossed galvalume, 26 gauge white stucco embossed G-90 galvanized steel, 26 gauge smooth galvalume, 26 gauge smooth bright G-90 galvanized steel, .032" stucco embossed aluminum, .040" smooth white aluminum, and 22 gauge #4 finish 304 stainless steel. Please contact your Arctic Sale Representative for additional information on the wide variety of custom materials, finishes and embossments available.

05 Electrical

a. Wiring shall be concealed in the interior of the door frame and foamed-in-place to eliminate internal conduit runs and provide a more sanitary and aesthetically look.

b. Standard electrical services requirements are 120 volt, 60 cycle, 1-phase, 15 amp circuit. Please contact your Arctic Sales Representative for accommodation of other electrical service requirements.

c. The interior wiring shall extend out the top of the door frame for the primary electrical power connection. For indoor applications the ceiling panel will have a corresponding hole to align with the door frame electrical power. For applications with auxiliary lighting a switched auxiliary wire shall also extend out the top of the door frame.

d. Field wiring of the primary electrical power connection and auxiliary lighting shall be the customers responsibility and be performed by a qualified electrician to the National Electric Code and all applicable local standards. Field wiring typically involves mounting a junction box on the roof of the cooler and routing the provided interior wiring into the junction box. Auxiliary lighting is typically wired from the outside of the cooler with penetrations made by the electrician into the cooler interior for connection to the auxiliary lighting. All field wiring must be properly sealed to prevent air leakage and condensation inside of the conduit and auxiliary light fixtures.

e. Door frames shall be provided with an integral ultra-bright LED temperature display and light switch.

f. Door frames shall be provided with a vapor proof light fixture on the interior centered above the door. This fixture shall be either a LED fixture or an Edison style base socket.

g. Arctic can install concealed electrical wiring with receptacles mounted flush within the interior/exterior of panels for specific customer needs.

h. Arctic can install concealed copper cold water lines up to ½" diameter pipe for specific customer needs.

06 Hinged Doors

a. Doors shall be of in-fitting and of flush construction and bear a label indicating electrical certification to UL STD 471.

b. Doors available in bi-parting if requested.

c. Walk-in cooler door jambs shall be constructed of structural FRP pultrusions with mitered corners that are foamed-in-place to provide superior rigidity and prevent twisting and door sag.

All walk-ins are certified to NSF Std. 7 and UL Std. 471 by Intertek

20.01a

d. Walk-in freezer door jambs shall be constructed of structural aluminum extrusions for freezers that are foamed-in-place to provide superior rigidity and prevent twisting and door sag.

e. Door plug frames shall be constructed of structural FRP pultrusions that are foamed-in-place to provide a flat door plug of accurate dimensions.

f. Door frame and plug insulation shall be the same as specified for the panels.

g. Door thresholds shall be 1/8" aluminum unless otherwise specified.

h. Standard door size shall provide for a 34" wide x 78" tall clear opening provided with two cam rise, spring loaded, chrome hinges. Hinges are fastened to two layers of 14 gauge galvanized steel backing foamed-in-place in the door frame and door plug.

i. Hinged door sizes of widths up to 6' 0" and heights up to 20' 0" can be provided. Additional hinges are provided as requested by the customer and as dictated by engineering requirements for larger doors.

j. Doors shall be provided with an NSF approved one-piece magnetic gasket for a positive seal.

k. Doors shall be provided with a butyl rubber gasket mounted to the bottom edge of the door.

l. Door handles shall be provided with a cylinder lock and an inside release. Multiple options available on request.

m. Doors that access ambient air conditions shall be provided with a vinyl strip curtain.

n. Freezer doors shall be supplied with a frame and threshold heater.

o. Freezer doors shall be supplied with a heated air vent.

p. In applications that require a kickplate, the plate shall be flush with the door metal and not include an overlay.

q. Optional features are available to meet customer and project requirements. Common optional features are heated and non-heated viewports, internal and external aluminum diamond plate or stainless

07 Sliding Doors

a. Doors shall be overhead mounted with two layers of ¾" exterior grade plywood backing foamed-in-place to provide a structural mounting location for sliding door hardware.

b. Door core foam shall be UL Listed, Class 1 fire rated, urethane foam permanently bonded to the interior and exterior metal skins. Each walk-in shall have a label indicating certification to ASTM STD E84/UL STD 723.

c. Doors shall be of a finish material selected by customer.

d. Door plug frames shall be constructed of treated 2" lumber.

e. Door gaskets shall be resilient flexible vinyl tested to ASTM STD E4257. Walk-in cooler floor gasket shall be of the single bulb sweeper type. Walk-in freezer gasket shall be of the dual sweeper type mounted in a "U" channel. Side and top gaskets shall be of the large bulb type and mounted to the inside perimeter of the door.

f. Pre-assembled one-piece trolley assembly features heavy extruded aluminum chassis with heavy-duty 3-1/2" diameter nylon-clad stainless steel ball bearing rollers. Built-in anti-lift feature and deep-seated rollers prevent derailing and provide stability.

g. Rail and track are rugged, corrosion resistant extruded aluminum for quick response and straight, sure tracking even with maximum door load.

h. Track ramps are tough, smooth acetal for long wear and easy sliding. "Down-and-in" action provides easier door operation, yet ensures a tight door seal in combination with the lower guide.

i. Micro-leveling feature allows for vertical door adjustment to maintain door seal, even where floors are uneven or after sweeper gasket is worn. Adjustment nuts are located up front for easy access.

j. Large exterior pull-handle of chrome plated, die-cast zinc and steel recessed inside pull handle shall be provided.

08 Floors

a. Floors are optional and when provided floor construction and insulation shall be the same as specified for wall panels.

b. Floors are rated to withstand a uniformly distributed stationary load of 1,200 per square foot. Heavy duty structural floors are available when specified. Please contact your Arctic Sale Representative for additional information.

c. Floor wear surface shall be smooth aluminum. Other floor wear surfaces are available and include but are not limited to 16 gauge 304 #4 finish stainless steel and aluminum diamond tread plate. Please contact your Arctic Sale Representative for additional information.

d. Ramp wear surfaces are 16 gauge stainless steel or aluminum diamond treadplate with a ½" wood backer foamed-in-place to structural cross supports.

e. NSF cove to be formed and foamed-in-place in floor panels.

f. Floorless walk-in coolers shall be provided with steel "U" channel and integral NSF 6" cove for field installation by customer both inside and out.

g. Cooler floor panels are available in thicknesses ranging from 2" to 5-3/8".

09 Closures and Trim

a. Matching ceiling closure panels and vertical trim strips for finishing between walk-in walls and building walls and building ceiling shall be supplied when specified and noted on the approved project drawings. Customer may select any style of custom configuration to meet job site needs.

10 Accessories

A wide array of optional accessories are offered to meet the exact customer and project requirements. Some of the more common accessories provided are:

a. Viewports (windows) on doors

b. Windows on walls

c. Reach-In doors; solid or glass

d. Aluminum and stainless steel bumper rails and hat channels.

e. 3-way light switches

f. A wide range of LED lighting options

g. Outdoor roof membrane packages, multiple colors.

h. Alarm systems (temperature, door ajar, panic alarm, etc.)

i. Alarm systems can be wired to multiple boxes, to a remote communicator for a connection to a customer is monitoring system.

j. Clear View single or bi-parting swing doors.

k. Foamed-in-place backing for attachment of shelving or other structural requirements

l. Doors positioned right up against the adjacent wall with zero jamb clearance.

m. Wide variety of glass reach-in doors in sizes and colors to meet customer specifications. Shelving and LED lights included.

n. Diamond Treadplate or Stainless Steel, 36" -48" wainscoting for interior or exterior installation to protect walls.

o. Cooler floor panels as thin as 2".

p. Corners at an angle ranging from 0 - 180°

q. Seismic engineered stamped drawings and seismic mounting components

r. Please contact your Arctic Sales Representative for accessories to meet your unique requirements.

11 Refrigeration

a. A comprehensive selection of refrigeration systems, air and water-cooled, in top mount self-contained, pre-assembled remote, and remote configurations are available to meet the exact customer and project requirements.

b. Evaporators that are of low profile, center mount, or medium profile with a maximum 70' throw. Coils can be manufactured with rust proof coating to meet customer's specific product needs.

12 Warranty

a. Panels shall include a 15-year performance warranty, doors and door assemblies shall include a 5-year materials and workmanship warranty, and refrigeration shall include a 1-year parts and labor warranty.

c. Warranty is only valid if walk-in and refrigeration is installed by a factory authorized installer incorporating ASHRAE standards and practices.

d. This is a warranty summary only. The actual walk-in warranty is governed by our complete warrant document which may be found at https://www.arcticwalkins.com/literature-3/miscellaneous/.

Please note that we have a continuous product development and improvement program which may result in change without notice to this specification.

CMA
RESTAURANT SUPPLY & DESIGN, INC.

Submittal Sheet

04/21/2026

ITEM# 8 - FREEZER CONDENSING UNIT (1 EA REQ'D)

Arctic

BCH0022LCACYA0000 - SUBMITTAL

Project Name:	QUOTE R4122368	Project Location:	US
Quote ID:	R4123166	Item #:	1010
Submitted For:	-	Submitted On:	04/09/2026
Submitted By:	Rusty Brown	Submitted From:	-
Identity #:	-	Tag:	-
System Description:	Split system	System Tag:	Freezer

☐ For Record ☐ For Approval By:_____ Date:_____

General Product Information

Product Family:	HTS	Compressor Brand:	Copeland
Application:	Outdoor	Compressor Type:	Scroll
Temperature Range:	Low Temp	Compressor Hp:	2
Voltage: (Volts/Ph/Hz)	208-230/3/60	Compressor Model:	YF07KAE
Refrigerant Type:	R454A	Number of Compressor(s):	1
Piping:	Standard	Coil Type:	Microchannel

Technical Information

Performance Data

Ambient Temperature (°F)	Saturated Suction Temperature (°F)	Application Capacity* (BTU/H)	Altitude (ft)	AWEF Value
95	-21.6	6720.0	0	3.1

Electrical Data

Compressor(s)		Fan Motor(s)			Electric Ratings						
RLA	LRA	Quantity	Hp	FLA	Defrost Type	High or Low Amps?	Number of Contactors	MCA	MOPD	Evap.Fan Amps	Defrost Heater Amps
7.8	58	1	1/15	0.5	AIR DEFROST	-	-	15	15	5	15

Unit Specifications

Connections (in.)		Receiver 90% Full (lbs)		Fan Blade(s) Diameter (in)	Sound Data (dB)	Approx. Net Weight (lbs)
Liquid Line	Suction	Standard	Over Sized			
3/8	5/8	9	-	14	63	173

Dimensional Drawing(s)

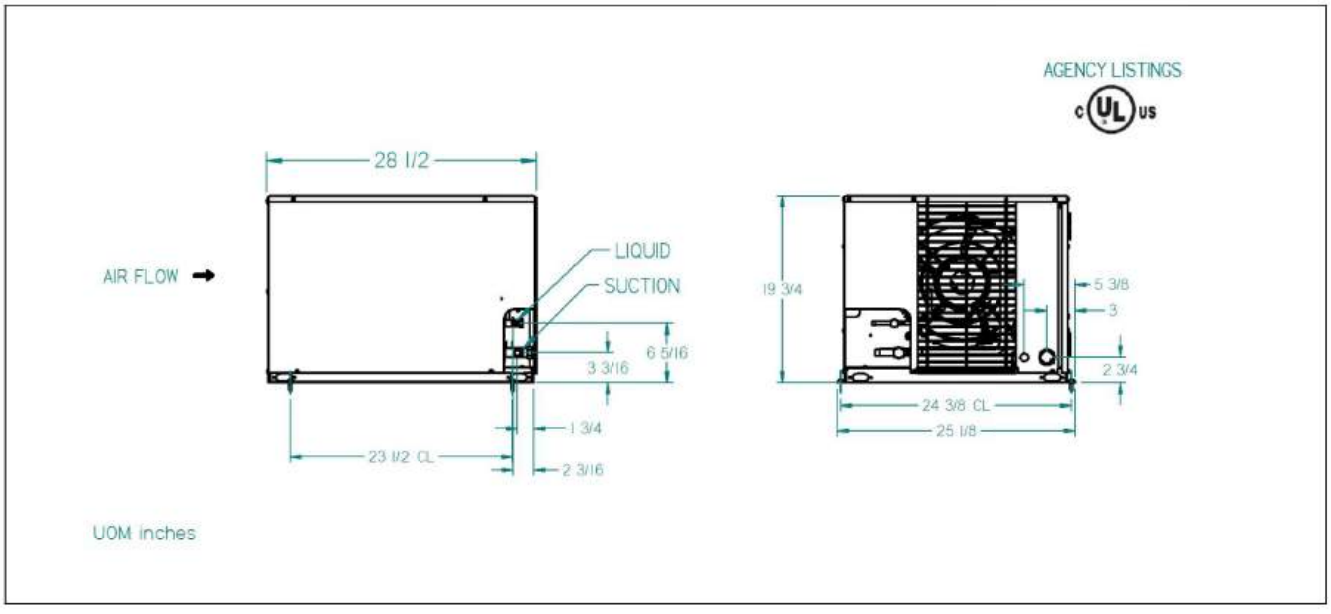

BCH0022LCACYA0000 - SUBMITTAL

Project Name:	*QUOTE R4122368*	*Project Location:*	*US*
Quote ID:	*R4123166*	*Item #:*	*1010*
Submitted For:	*-*	*Submitted On:*	*04/09/2026*
Submitted By:	*Rusty Brown*	*Submitted From:*	*-*
Identity #:	*-*	*Tag:*	*-*
System Description:	*Split system*	*System Tag:*	*Freezer*

Standard Features

CABINET AND CONSTRUCTION

- MICROCHANNEL COIL TECHNOLOGY STANDARD ON ALL UNITS
- PAINTED STEEL CABINETS FOR SUPERIOR STRENGTH AND CORROSION PROTECTION
- HEAVY DUTY, STEEL, 1-1/2" TALL BASE

SERVICEABILITY

- SUCTION SERVICE VALVES FOR HERMETIC AND SCROLL COMPRESSORS LOCATED OUTSIDE THE CABINET FOR QUICK INSTALLATIONS.
- RECEIVER WITH FUSIBLE PLUG, LIQUID SHUTOFF VALVE AND CHARGING PORT IS STANDARD
- LARGE ELECTRICAL PANEL FOR EASE OF ACCESS
- PREFABRICATED WIRING HARNESSES FOR TIGHT CRIMP CONNECTIONS AND CONSISTENT LABELING
- UNIT STAYS ON IF THE HOOD IS REMOVED FOR SERVICING
- SIGHT GLASS IS EASILY VIEWABLE

QUALITY

- ALL UNITS ARE COMPLETELY LEAK TESTED IN A HELIUM ENVIRONMENT, BUMP TESTED AND ALLOWED TO CYCLE OFF ON THE HIGH AND LOW PRESSURE CONTROL. EACH UNIT HAS A COPY OF THE RUN DATA SHIPPED INSIDE THE ELECTRICAL PANEL
- ELECTRICAL CIRCUITS ARE COMPLETELY CHECKED FOR CONTINUITY
- PIPING IS LAID OUT TO MINIMIZE STRESS AND VIBRATION AND IS PRE-BENT TO ELIMINATE LEAKS
- ENCAPSULATED, AUTO-RESET, HIGH AND LOW PRESSURE CONTROLS TO ELIMINATE LEAKS (ADJUSTABLE LOW PRESSURE CONTROL STANDARD)

Options

Mounted Options

- Preferred Package Code - A0000
- Motor - TWO SPEED EC MOTOR
- Receiver Options - STANDARD
- Liquid Line Options - FILTER DRIER AND SIGHT GLASS
- Discharge Line Options - HEAD PRESSURE VALVE 145#
- Fused Disconnect - NO FUSED DISCONNECT
- Crankcase Heater - CRANKCASE HEATER
- Snow Legs - NONE
- Brand Label - BOHN
- Coil Selection - MICROCHANNEL COIL
- Defrost Timer Options - NO TIMER
- Suction Line Options - SUCTION TUBE ONLY
- Cabinet Selection - Painted
- Pressure Options - ADJUSTABLE LOW - FIXED HIGH
- Phase Loss Monitor - NONE
- Hail Guard Factory Installed - NONE

Minimum Unit Clearances

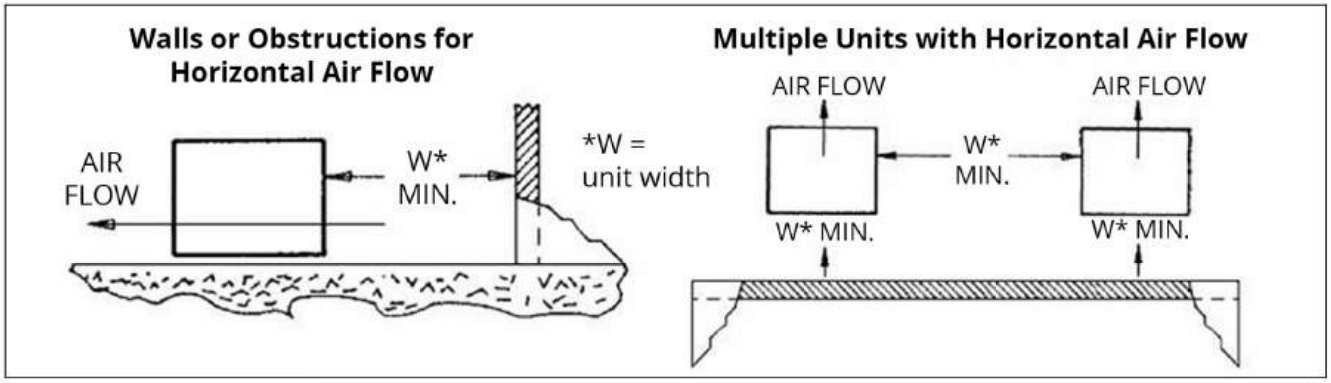

Notes

** Capacities shown are Application Capacities reflecting nominal operation at 10°F TD. For models within the scope of the DOE AWEF (Annual Walk-in Energy Factor) standard, the Net Capacity is determined by the AHRI 1250 test method. DOE will publish this compliance data at www.regulations.doe.gov*

** Units using A2L refrigerants must be installed in accordance with UL 60335-2-89 and ASHRAE 15 standard*

** Per ASHRAE Standard 15, fusible plugs and pressure relief valves may need to be externally piped when using flammable refrigerants*

**Only refrigerants in compliance with New York state regulations can be used in the state of New York.*

CMA
RESTAURANT SUPPLY & DESIGN, INC.

Submittal Sheet

04/21/2026

ITEM# 9 - FREEZER EVAPORATOR COIL (1 EA REQ'D)

Arctic

BEL006BY6EEA - SUBMITTAL

Project Name:	QUOTE R4122368	Project Location:	US
Quote ID:	R4123166	Item #:	1020
Submitted For:	-	Submitted On:	04/09/2026
Submitted By:	Rusty Brown	Submitted From:	-
Identity #:	-	Tag:	-
System Description:	Split system	System Tag:	Freezer

☐ For Record ☐ For Approval By:_____ Date:_____

General Product Information

Product Family:	BEL	Motor type	EC
Defrost Type:	Electric	Number of Fans:	2
Voltage: (Volts/Ph/Hz)	208-230/1/60	Fan HorsePower	1/20
Refrigerant Type:	R454A	Fins per Inch	6
Minimum Room Area: (ft^2)	27 (9.0ft height)	Mitigation Zone:	Volume

Technical Information

Performance Data

Capacity			Air Flow				Altitude (ft)	AWEF Value	
TD (°F)	SST (°F)	Application Capacity* (BTU/H)	CFM	Fan Diameter (in.)	Air Throw (ft)			Cooler > 32	Freezer <= 32
					Standard	w/Collar			
9.6	-21.6	7,000	1371	12	-	-	0	9	4

Electrical Data

Fan Motor(s)		Defrost Heater(s)		Drain pan Heater(s) HG	
Watts	Amps	Watts	Amps	Watts	Amps
118	1	2100	9.1	-	-

Unit Specifications

Connections (in.)						Approx. Net Weight (lbs)
Coil Inlet	Suction	External Equalizer	Drain	Side Port	Hot Gas Drain Pan	
1/2	5/8	1/4	3/4	-	-	54

Dimensional Drawing(s)

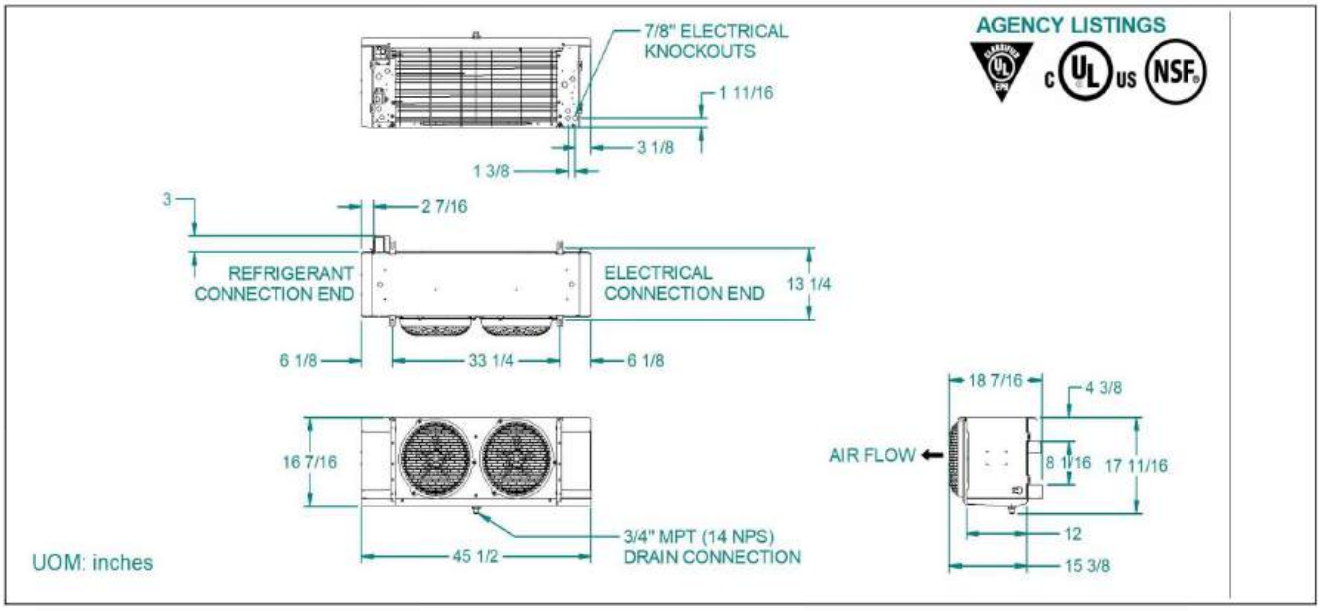

BEL0065BY6EEA - SUBMITTAL

Project Name:	*QUOTE R4122368*	*Project Location:*	*US*
Quote ID:	*R4123166*	*Item #:*	*1020*
Submitted For:	*-*	*Submitted On:*	*04/09/2026*
Submitted By:	*Rusty Brown*	*Submitted From:*	*-*
Identity #:	*-*	*Tag:*	*-*
System Description:	*Split system*	*System Tag:*	*Freezer*

Standard Features

EASE OF INSTALLATION SERVICE

- ALL ELECTRICAL COMPONENTS FACTORY WIRED TO TERMINAL BOARD AND IDENTIFIED, MAKING IT EASY TO FIELD WIRE THE UNIT
- CABINET DESIGN FEATURES HINGED, REMOVABLE FRONT ACCESS PANELS ON EACH SIDE FOR EASY ACCESS TO ELECTRICAL AND REFRIGERATION COMPONENTS
- LIQUID LINE SOLENOID WIRE HARNESS IS FACTORY-INSTALLED FOR QUICK INSTALLATION
- MOTORS PLUG INTO WIRING HARNESS FOR EASIER SERVICING
- HINGED, REMOVABLE DRAIN PAN FOR EASY AND SAFE ACCESS
- PRE-DRILLED HOLES ON THE BACK OF THE UNIT FOR ROOM THERMOSTAT
- QUICK REMOVAL FAN GUARD/MOTOR ASSEMBLY FOR EASY SERVICE OR REPLACEMENT OF AIR MOVER PARTS

PERFORMANCE

- INTERNAL PANELS ARE ISOLATED FOR QUIET OPERATION
- INTERNALLY ENHANCED TUBING AND FIN DESIGN FOR HIGHER EFFICIENCY
- EC MOTORS STANDARD ON ALL MODELS FOR IMPROVED UNIT EFFICIENCY

RELIABLE DURABLE

- HEAVY GAUGE GRAINED ALUMINUM CABINET CLEANS EASILY AND LOOKS ATTRACTIVE
- MOLDED FAN GUARD AND ACCESS PANELS ARE MADE OF STRONG, DURABLE, AND NSF AND UL SANITATION RATED PLASTIC MATERIAL
- SWEAT CONNECTIONS TO REDUCE POTENTIAL FOR LEAKS

VERSATILE

- LARGE DIAMETER DRAIN HOLE (3/4 " ID) IS LOCATED TOWARDS THE BACK OF THE UNIT
- MINIMAL HEIGHT OF THE LOW PROFILE SERIES MAKES IT IDEAL FOR LOW CEILING COOLERS

Options

Mounted Options

- Brand Label - BOHN
- Drain Pan Defrost Voltage - 208-230/1/60
- Fan Blade - Standard
- Cabinet Type - Stucco
- Controller Option - Intelligen
- Defrost Control - None
- iNTELLIGEN Integration Card Add On - NO
- Coil Mechanical Option - Intelligen
- Liquid Temperature - 95
- Valve Family - L
- Motor - Fixed Speed EC
- DTFD Option - None
- Fan Guard - Molded
- Drain Pan Type - Stucco
- Control Communication - YES
- Fin Material - Aluminum
- iNTELLIGEN WebServer/Multi-System Control Card Add on - NO
- Saturated Suction Temperature - -20
- Customer Specified Valve Type - EEV
- Refrigerant Detection System - Factory Installed

Custom Options

Description	Quantity
WHITE CABINET	1

Shipped-Loose Options (Unit)

(QTY)Part Number - Description	(QTY)Part Number - Description
(1) 29338301 - VALVE-SOLENOID, 3/8 SSOV3S130 W COIL	(1) 29308801 - VALVE-CHECK, A2L, 1/2, CSOV-4S

Minimum Unit Clearances

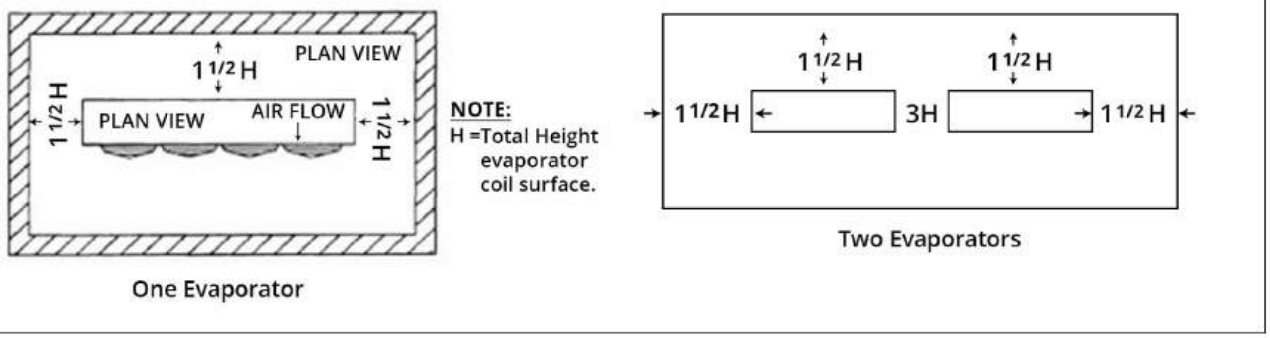

One Evaporator

Notes

** Capacities shown are Application Capacities reflecting nominal operation at 10°F TD. For models within the scope of the DOE AWEF (Annual Walk-in Energy Factor) standard, the Net Capacity is determined by the AHRI 1250 test method. DOE will publish this compliance data at www.regulations.doe.gov*

** Unit coolers using A2L refrigerants must be installed in accordance with UL 60335-2-89 and ASHRAE 15 standards*

CMA
RESTAURANT SUPPLY & DESIGN, INC.

Submittal Sheet

04/21/2026

ITEM# 10 - DEFROST HEATER SYSTEM (1 EA REQ'D)

Arctic

Description: DEFROST HEATER SYSTEM

Notes:

CMA
RESTAURANT SUPPLY & DESIGN, INC.

Submittal Sheet

04/21/2026

ITEM# 11 - SPARE NO.

<Spare No.>

Description: Spare No.

Notes:

CMA
RESTAURANT SUPPLY & DESIGN, INC.

Submittal Sheet

04/21/2026

ITEM# 12 - SPARE NO.

<Spare No.>

Description: Spare No.

Notes:

CMA
RESTAURANT SUPPLY & DESIGN, INC.

Submittal Sheet

04/21/2026

ITEM# 13 - FREEZER STORAGE SHELVING (4 EA REQ'D)

Metro PR-246074K3-S-4

Super Erecta Pro® Starter Unit, 24"W x 60"D x 74"H, (4) corrosion resistant shelves with removable polymer shelf mats, (4) bags of split sleeves, (4) posts, NSF

The spec sheet for this item can be viewed on item 5)

CMA
RESTAURANT SUPPLY & DESIGN, INC.

Submittal Sheet

04/21/2026

ITEM# 14 - BUN / SHEET PAN RACK (1 EA REQ'D)

John Boos ABPR-1820-3KD-X

Bun Pan Rack, mobile, (20) pan capacity, 3" spacing, front loading, 26"W x 20-1/2"D x 69"H, 1" square tube frame with bolted cross bracing, 5" swivel casters, 6063 aluminum construction, KD, NSF

The spec sheet for this item can be viewed on item 6)

ACCESSORIES

Mfr	Qty	Model	Spec
John Boos	1		Standard flyer accessories only, NO modifications to flyer items allowed or their accessories

CMA
RESTAURANT SUPPLY & DESIGN, INC.

Submittal Sheet

04/21/2026

ITEM# 15 - HEAT TRACE TAPE (1 EA REQ'D)

GC

Electrical heat trace tape to keep the freezer condensate line from freezing. NOT IN CMA CONTRACT

Description: HEAT TRACE TAPE

Notes: Electrical heat trace tape to keep the freezer condensate line from freezing. NOT IN CMA CONTRACT

CMA
RESTAURANT SUPPLY & DESIGN, INC.

Submittal Sheet

04/21/2026

ITEM# 16 - SPARE NO.

<Spare No.>

Description: Spare No.

Notes:

CMA
RESTAURANT SUPPLY & DESIGN, INC.

Submittal Sheet

04/21/2026

ITEM# 17 - SPARE NO.

<Spare No.>

Description: Spare No.

Notes:

CMA RESTAURANT SUPPLY & DESIGN, INC.

Submittal Sheet

04/21/2026

ITEM# 18 - EQUIPMENT STAND, FOR MIXER / SLICER (1 EA REQ'D)

John Boos MS4-2430GSK-X

Machine Stand, heavy duty, 30"W x 24"D x 20-1/4"H overall size, 14/300 stainless steel top with marine edge, galvanized steel adjustable lower shelf, galvanized steel legs & bullet feet, NSF, KD (Available in Effingham)

ACCESSORIES

Mfr	Qty	Model	Spec
John Boos	1		Standard flyer accessories only, NO modifications to flyer items allowed or their accessories
John Boos	1	CAS01-R-X	Casters, 5", heavy duty, locking, for 1-5/8" diameter legs (set of 4)

John BOOS® SINCE 1887

SPEC SHEET

"MS4-GSK" EQUIPMENT STANDS

14GA Stainless Steel Top w/18GA Galvanized Base & Shelf

FEATURES:

- 14GA Type 300 Stainless Steel Top With #4 Polish, Satin Finish
- Reinforced With A 1/2" Channel Running Entire Length Of Table
- Shelf Adjustable To Desired Height
- Shipped Knocked-Down, Easy-To-Assemble

SPECIFICATIONS:

- Top: Stainless Steel Tops Are TIG Welded, Exposed Welds Are Polished To Match Adjacent Surface
- Base: MIG Welded Galvanized Frame
- Top: 14GA Stainless Steel Type 300 Stainless Steel With #4 Polish, Satin Finish
- Shelf: 18GA Galvanized Steel
- Gussets: Galvanized Steel
- Feet: 1" Bullet Feet

CERTIFICATIONS:

NSF



MS4-3030GSK

"MS4-GSK" EQUIPMENT STANDS

MODEL	SIZE (L X W X H)	WEIGHT (LBS)
MS4-2424GSK	24"x24"x20-1/4"	33
MS4-2430GSK	30"x24"x20-1/4"	38
MS4-3030GSK	30"x30"x20-1/4"	42
MS4-3036GSK	36"x30"x20-1/4"	51

ALL DIMENSIONS ARE TYPICAL. TOLERANCE +/- .500". JOHN BOOS & CO. RESERVES THE RIGHT TO CHANGE SPECIFICATIONS WITHOUT NOTICE.

DETAILED SPECIFICATIONS

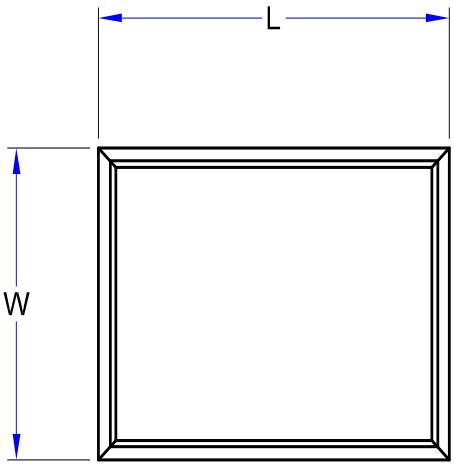

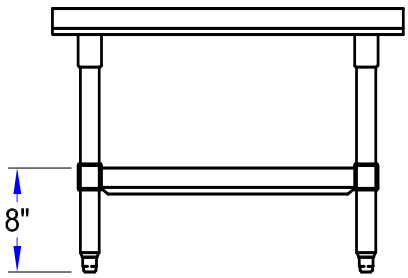

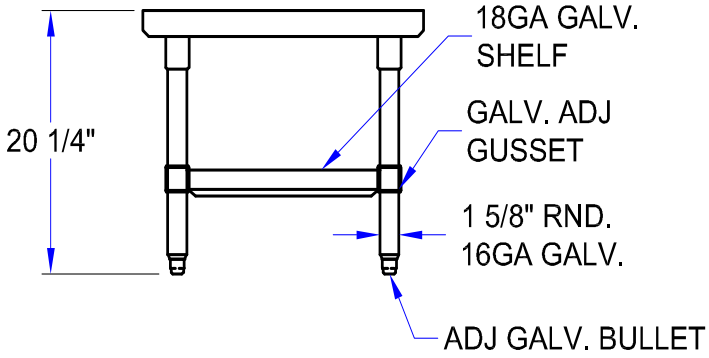

"MS4-GSK" EQUIPMENT STANDS

MODEL	SIZE (L X W X H)	WEIGHT (LBS)
MS4-2424GSK	24"x24"x20-1/4"	33
MS4-2430GSK	30"x24"x20-1/4"	38
MS4-3030GSK	30"x30"x20-1/4"	42
MS4-3036GSK	36"x30"x20-1/4"	51

ALL DIMENSIONS ARE TYPICAL. TOLERANCE +/- .500". JOHN BOOS & CO. RESERVES THE RIGHT TO CHANGE SPECIFICATIONS WITHOUT NOTICE.

John BOOS Since 1887

ITEM #: _____ QTY: _____

MODEL #: _____

PROJECT NAME: _____

021521

3601 S. Banker St. Effingham, IL 62401 • P.O. BOX 609 • Ph: (888) 431-2667 • Fax: (800) 433-2667

"CAS" CASTERS & FEET

CASTERS & FEET

MODEL #	QTY	ITEM	DESCRIPTION	SET OF
CAS01-R		CASTERS	5", HEAVY DUTY, LOCKING, FOR 1-5/8" DIAMETER LEGS	4
CAS02-R		CASTERS	5", HEAVY DUTY, LOCKING, FOR 1-5/8" DIAMETER LEGS	6
CAS03		CASTERS	2-1/2", HEAVY DUTY, LOCKING	4
CAS-RN		CASTERS	3", BLACK, LOCKING	4
CAS23-R		CASTERS	5", HEAVY DUTY, LOCKING, FOR 2" SQUARE TUBE	4
CUCCAS-DLGS		CASTERS	5", SWIVEL LOCKING PLATE CASTER	4
CAS05		FLANGE FEET	ADJUSTABLE, STAINLESS STEEL	4
CAS05H		FLANGE FEET	ADJUSTABLE WITH HOLES FOR ATTACHMENT TO FLOOR, STAINLESS STEEL	4
CASWS05-4		CASTERS	LOCKING W/ BUMPERS	4
CAS06		FLANGE FEET	ADJUSTABLE, STAINLESS STEEL	6
CAS06H		FLANGE FEET	ADJUSTABLE WITH HOLES FOR ATTACHMENT TO FLOOR, STAINLESS STEEL	6
CAS07		BULLET FOOT	ADJUSTABLE, STAINLESS STEEL	EACH
CAS07-4		BULLET FOOT	ADJUSTABLE, STAINLESS STEEL, ONE (1) EACH PER LEG OF TABLE	4
CAS07-6		BULLET FOOT	ADJUSTABLE, STAINLESS STEEL, FOR 1-5/8" DIA. LEG	6
CAS08		BULLET FOOT	ADJUSTABLE, STAINLESS STEEL, FOR 1-1/2" SQUARE LEG	EACH
CAS08-4		BULLET FOOT	ADJUSTABLE, STAINLESS STEEL, FOR 1-1/2" SQUARE LEG	4
CAS08-6		BULLET FOOT	ADJUSTABLE, STAINLESS STEEL, FOR 1-1/2" SQUARE LEG	6
CAS12-1		FLANGE FEET	ADJUSTABLE, STAINLESS STEEL, (W/ MOUNTING HOLES)	EACH
CAS14		CASTERS	5", HEAVY DUTY, LOCKING	4
CAS14-6		CASTERS	5", HEAVY DUTY, LOCKING	6
CAS15		FLANGE FEET	ADJUSTABLE, STAINLESS STEEL	EACH
CAS16		FLANGE FEET	ADJUSTABLE, STAINLESS STEEL, 3-1/2" DIA.	4
CAS17		FLANGE FEET	ADJUSTABLE, STAINLESS STEEL, 3-1/2" DIA., (TABLES 84" & LONGER WITH 6 LEGS)	6


CAS01-R


CAS03


CAS-RN


CASWS05-4


CAS07

SOME UNITS SHIP UNASSEMBLED FOR REDUCED SHIPPING COST. ALL DIMENSIONS ARE TYPICAL. TOLERANCE +/- .500"

John Boos & Co. is constantly engaged in a program of improving products and therefore reserves the right to change specifications without prior notice.

CMA
RESTAURANT SUPPLY & DESIGN, INC.

Submittal Sheet

04/21/2026

ITEM# 19 - EXISTING MEAT GRINDER (1 EA REQ'D)

OWNER 4822+BUILDUP

EXISTING MEAT GRINDER / CHOPPER TO BE PROVIDED BY OWNER. NOT IN CMA CONTRACT.

ACCESSORIES

Mfr	Qty	Model	Spec
Hobart	1		Standard warranty: 1-Year parts, labor & travel time during normal working hours within the USA
OWNER	1	4822-34	120/60/1 Voltage Specification, No Thermal Overload, 6' power cord with NEMA 5-15P plug, USA/EXP Configuration
OWNER	1	22C/E-5PLT	Straight Throat Chop End Assy for #22 Attachment hub; inlcudes the tinned straight throat chop cylinder, auger & adjusting ring; a Stay Sharp™alloy knife, & 1/8", 3/16", 1/4", 3/8" & 1/2" carbon steel grind plate (no pan)
OWNER	1	12/22PN-SST	Rectangular Grind Pan, 19.5" x 11.5" x 2.5" stainless steel pan (for use with straight throat chop end)

HOBART

Project _____

AIA # _____ SIS # _____

Item # _____ Quantity _____ C.S.I. Section 114000

FOOD PREPARATION

4822
Meat Chopper



MODEL

❑ **4822** Meat Chopper

STANDARD FEATURES

+ 1½ HP motor (1¼ HP for 230/50/1 unit)
+ Manual ON/OFF switch
+ 6 food cord & plug
+ 212 RPM transmission (180 RPM for 230/50/1 unit)
+ Stainless steel housing
+ Stainless steel legs with rubber feet
+ Spiral-fluted chopping end
+ Plastic feed stomper
+ #22 Stay-Sharp knife

OPTIONS

❑ Funnel-shaped (FS) cylinder

ACCESSORIES

❑ #22 Stay-Sharp knife and plates
❑ #22 stuffing horns
❑ Rectangular and round pans

SPECIFIER STATEMENT

Specified unit will be an NSF rated Hobart meat chopper with 1.5 HP motor. Chopper features #22 attachment hub, stainless steel finish and spiral-fluted chomping end. Unit processes 12-20 pounds per minute and includes Stay-Sharp knife and ⅛" diameter grind plate. Additional grind plate sizes and funnel shaped cylinder can be purchased separately.

4822 MEAT CHOPPER

Approved by_____ Date_____ Approved by_____ Date_____

HOBART

4822
Meat Chopper

SOLUTIONS/BENEFITS

PERFORMANCE

Stay-Sharp Knife & Plates

+ Hardened, alloy steel holds its edge longer than standard carbon steel
+ Can be resharpened many more times than regular plates

1½ HP Motor

+ Power to handle tough jobs
+ Ample ventilation ensures cool operation and long life

EASE OF USE

Knife, Plate, and Plastic Stomper Included

+ Everything you need to start working

SANITATION & CLEANING

Heavily Tinned Cylinder, Worm, and Adjusting Ring

+ Protects against oxidation
+ Provides easy-to-clean finish

Stainless Steel Finish

+ Easy to clean and exceptionally durable

Plugs and Receptacles:
Dependent on local power codes

Machine Voltages	
4822	**120/60/1**
Service Current Requirement if Plug Connected	120/60/1
	15 Amp.
Terminal Designation of Plug	2 Pole 3 Wire Grdg.
NEMA Plug Configuration	5-15P
Plug Configuration	
Molded Plug on Cord	Yes
Plug – Straight/Angle	Straight
NEMA Receptable or Connector Configuration	5-15R
Power Cord Included	Yes

Cord and plug only furnished on 120/60/1 voltage models.

SPECIFICATIONS

Electrical: 120/60/1; 12 amps, 240/60/1; 6 amps, 208-240/60/3; 3.4 amps – UL listed. 230/50/1; 6 amps – not submitted for UL listing.

Motor: 1½ HP (1¼ HP for 230/50/1), four pole, capacitor start-capacitor run type. Three phase is poly-phase, induction type. AC induction motor. Motor ventilation is provided through screened openings in the base, assuring cool operation.

Switch: Mounted at back of machine (can be switched to the front).

Cord and Plug: A 6 foot, flexible 3-wire cord is furnished on some models – see machine voltages table for models that include a cord and plug.

Transmission: Precision made gears and shafts mounted on ball bearings are fully enclosed in the transmission case, packed with a special grease at the factory. The attachment hub has a double seal, designed to exclude meat juices or water from the transmission. Worm speed is 212 RPM for 60 Hz, 180 RPM for 50 Hz.

Capacity: 16 pounds per minute through a ⅛" plate on first cutting. FS option will grind 20 to 22 lbs per minute through a ⅛" plate on first cutting.

Finish: Standard finish is a stainless steel housing. Stainless steel trim plate is provided at the attachment opening, and polished stainless steel legs are cushioned on the bottom with neoprene rubber.

Chopping End: 4822 has a Hobart protective type chopping end, with cylinder of the spiral-fluted design. FS option has a guarded open bowl type chopping end. A heavy cast aluminum safety guard is supported by vertical posts permanently mounted on the cylinder. The cylinder, worm and adjusting ring are all heavily tinned. A heat-treated steel knife and plate and plastic feed stomper are provided.

Feed Pan: Stainless steel pan – 19½" x 11½" x 2½" inside dimensions. FS option has stainless steel pan – 33" x 15¾" x 3¾".

Warranty: Unit has full one-year warranty on parts, labor, and mileage against manufacturer's defects.

Weight:

Base Unit: Shipping – 110 lbs.; Net – 90 lbs.
Chop End: Shipping – 27 lbs.; Net – 26 lbs.
Chop End, FS: Shipping – 34 lbs; Net – 31 lbs.
Pan: Shipping – 5 lbs.; Net – 4 lbs.
Pan, FS: Shipping – 17 lbs.; Net – 17 lbs.

HOBART

4822
Meat Chopper

DETAILS AND DIMENSIONS

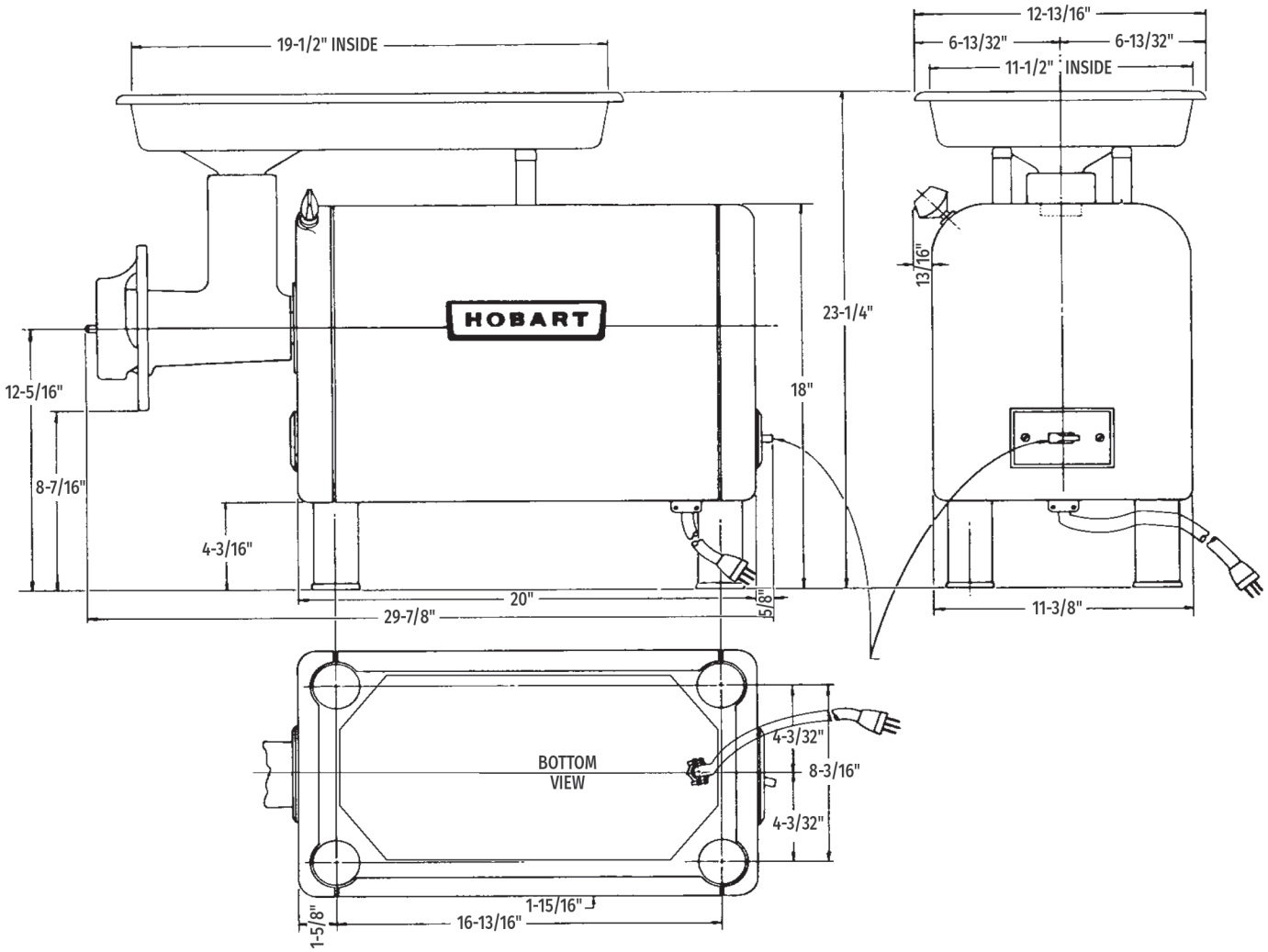

WARNING: **Electrical and grounding connections must comply with the applicable portions of the National Electrical Code and/or other codes in force.**

As continued product improvement is a policy of Hobart, specifications are subject to change without notice.

CAD and/or Revit Files Available

CMA
RESTAURANT SUPPLY & DESIGN, INC.

Submittal Sheet

04/21/2026

ITEM# 20 - MEAT BONE SAW, ELECTRIC (1 EA REQ'D)

Hobart 6801+BUILDUP

Meat Saw, vertical blade, 16” Pulleys, 4150 fpm, 3 Hp motor, direct gear transmission, stainless steel open frame design, push/pull switch, moveable-lockable carriage tray, two piece stationary rear cutting table, adjustable legs (2" movement), hose down capability

<Incomplete>

ACCESSORIES

Mfr	Qty	Model	Spec
Hobart	1		<Incomplete> Standard warranty - 1-Year parts, labor & travel time during normal working hours within the USA
Hobart	1	6801-18	<Incomplete> 200-230v/60/3-ph Voltage Specification, US/Export Configuration, Standard Packaging, without Cord & Plug

HOBART

Project _____

AIA # _____ SIS # _____

Item # _____ Quantity _____ C.S.I. Section 114000

FOOD PREPARATION

6801
Vertical Meat Saw



6801



6801-18IP**

MODELS

❑ **6801** Vertical meat saw, cutting clearance 15¾" D x 17½" H x 24" W

STANDARD FEATURES

+ 3 HP motor
+ Direct gear drive transmission
+ Tri-rail carriage
+ Open frame stainless steel construction
+ Center crown pulley
+ Removable double flanged pulleys
+ Split rear table
+ Direction grain stainless steel
+ Pivoted automatic tension
+ Stainless steel top cover
+ Adjustable legs

ADDITIONAL MODEL WITH OPTIONAL FEATURES**

❑ Includes standard features above

❑ Integrated pusher carriage**

OPTIONAL FEATURES & ACCESSORIES

❑ Cord & plug (200-230/60/3 only), 6 ft power cord with NEMA L15-20P plug

❑ Bulk blade set, 25 pieces, 0.022 x ⅝ x 142" saw blade

SPECIFIER STATEMENT

Specified unit will be an NSF rated Hobart vertical meat saw with a cutting clearance of 15¾" D x 17½" H x 24" W. Features a 3 HP motor and direct gear drive transmission with a blade speed of 4,150 fpm. Meat saw has adjustable legs, pivoted automatic tension, and movable carriage tray. Unit has an open frame stainless steel construction, two-piece table and removable double flanged pulleys for easy cleaning and sanitation.

6801 VERTICAL MEAT SAW

Approved by _____ Date _____ Approved by _____ Date _____

HOBART

6801
Vertical Meat Saw

SOLUTIONS/BENEFITS

PERFORMANCE

3 HP Motor

Direct Gear Drive Transmission

- No belts to replace, slip, adjust or break
- Helical gear reduction
- 4150 fpm blade speed

Stationary Cutting Table

- 21½" x 39⅝" heavy stainless steel with turned down edges for rigidity
- Fully supported for heavy duty use and stacking space
- Two-piece table for easy break down and cleaning

EASE OF USE

Adjustable Legs

- Adjust machine height for easier, more comfortable use

Pivoted Automatic Tension

- Motor, transmission, and lower pulley assembly is pivot mounted
- Blade tension control easily accessible below table
- Easily adjusts for broad blade length tolerance

Removable Double-Flanged Pulleys

- Removes without tools
- Bright tinned cast iron upper and lower blade pulleys
- Blade retaining double flanges and center crown for long life without loss of blade integrity
- True running of the blade ensured by precision pulley balance

Integrated Pusher Carriage**

- Fully integrated pusher incorporates this convenience feature into the carriage system making it easier to locate and operate.
- When not in use, pusher can be rotated out of the way.
- No tools needed for disassembly for cleaning, minimal parts for sanitation

Rugged Gauge Plate

- 6¾" x 16¾" stainless steel plate on aluminum cast frame
- Easily disengaged for adjustment
- Adjustment gives quick, positive regulation of cut thickness with precision
- Exclusive design of gauge plate end permits quick removal of cuts for stacking

SANITATION & CLEANING

Open-Frame Construction

- Hose down and power wash capabilities (up to 1100 PSI)

Enclosed Bone Dust System

- Large lower scrap pan traps dust

Easy Part Removal

- No tools needed to remove both pulleys, blade cleaners and guide assemblies
- Lower “lift-out” guide assembly has stainless steel blade guide
- Built-in tungsten carbide blade back-up block assembly is removable

OPERATOR ASSURANCE

Upper and Lower Blade Guards

- Blade guarded above and below cutting zone
- Blade remains accessible

Pusher Plate

- Eliminates need to handle items close to blade

Movable Carriage Tray

- 16" D X 24¼" W
- Stainless steel, turned down edges reinforces rigidity
- Stepped front edge and stainless steel ball bearings to move carriage quickly and easily
- Tri-rail carriage support assures stability
- Carriage lock is standard

SPECIFICATIONS

Motor: 3 HP motor; Totally enclosed, water resistant, flange mounted with grease-packed ball bearings.

Electrical: Available in 200-240/60/1; 16.5 amps, 200-230/60/3; 9.3-8.2 amps, 208-240/60/3; 2.6-3.0 amps, 460/60/3; 4.1 amps. Also available in 380-415/50/60/3; 5.0 amps, not submitted for UL listing.

Switch: Single pull-to-start, push-to-stop switch. Heater with controls to prevent moisture condensation on electrical components.

Adjustable Leg Height: 2".

Saw Blade: ⅝" wide x 142" long.

Capacity: Cutting clearance is 15¾" D x 17½" H x 24" W.

Finish: Stainless steel open frame design.

Warranty: 1-year parts, labor, and travel during normal working hours within the USA.

Weight: Shipping - 570 lbs. Net - 430 lbs.

HOBART

6801
Vertical Meat Saw

LEGEND

Electrical Connections	
E1	Electrical connection

WARNING: Electrical and grounding connections must comply with the applicable portions of the National Electrical Code and/or other local electrical codes. Connection of conduit to base must be made using a waterproof fitting of proper size and design.

DETAILS AND DIMENSIONS

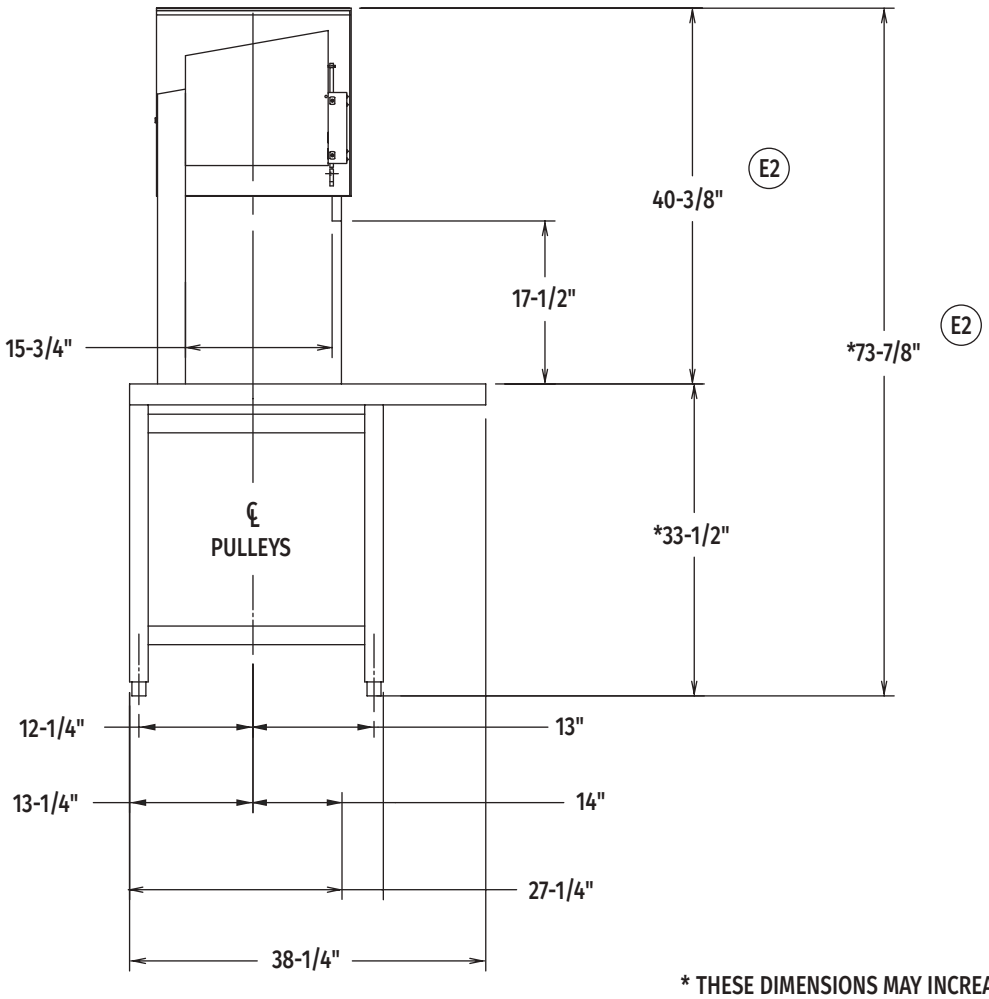

* THESE DIMENSIONS MAY INCREASE AS MUCH AS 1" DEPENDING ON LEG ADJUSTMENT.

E3 ** SAW SUPPLIED WITH 1/2" LIQUIDTIGHT CORD STRAIN RELIEF.

HOBART

6801
Vertical Meat Saw

DETAILS AND DIMENSIONS

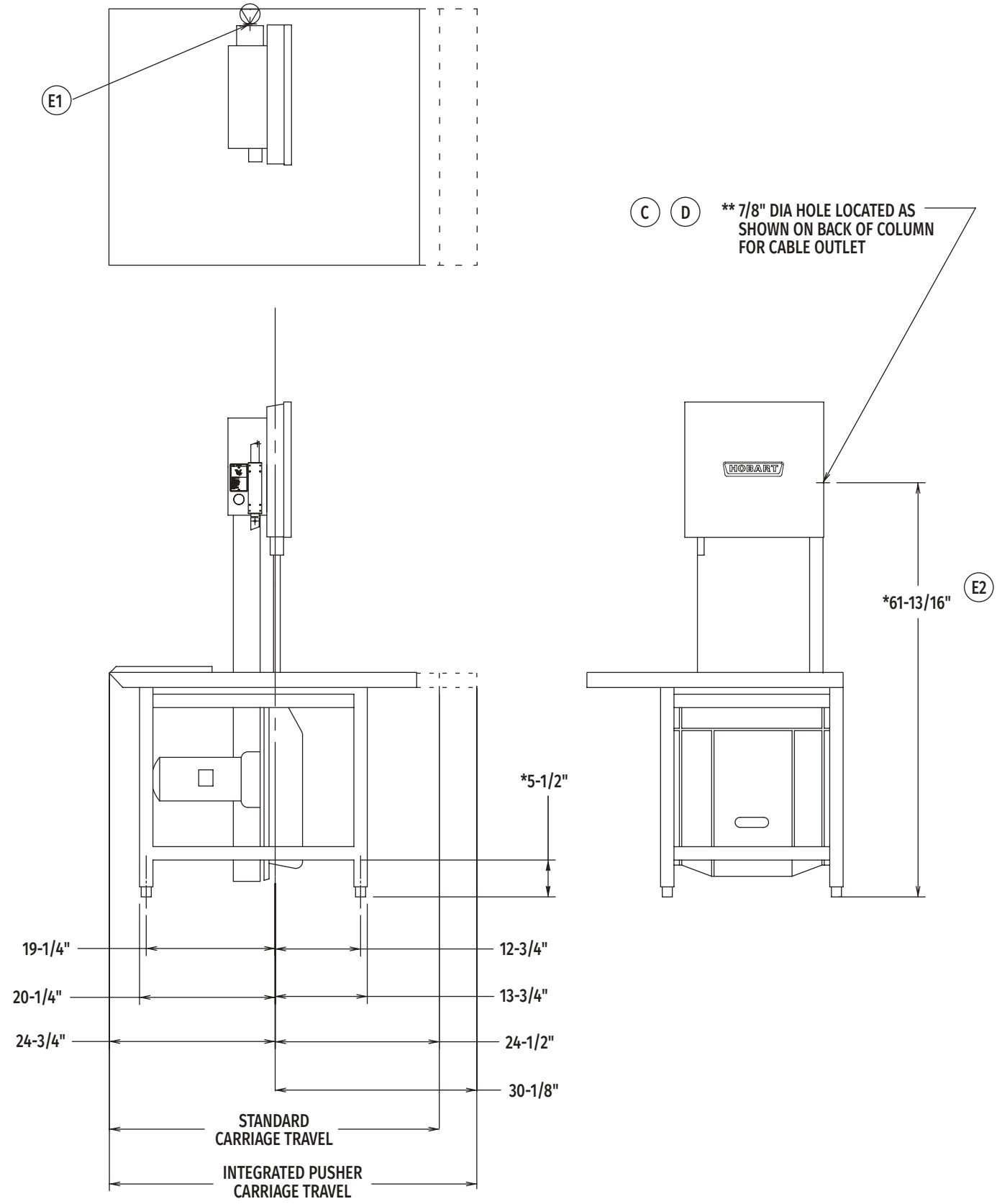

As continued product improvement is a policy of Hobart, specifications are subject to change without notice.

CAD and/or Revit Files Available

CMA
RESTAURANT SUPPLY & DESIGN, INC.

Submittal Sheet

04/21/2026

ITEM# 21 - SPARE NO.

<Spare No.>

Description: Spare No.

Notes:

CMA
RESTAURANT SUPPLY & DESIGN, INC.

Submittal Sheet

04/21/2026

ITEM# 22 - WALK-IN COOLER (1 EA REQ'D)

Arctic

Walk in cooler for hanging carcasses. Size and shape per plan, to be white galvalum interior and exterior with a vision window in the door.



Arctic®
WALK-IN COOLERS AND FREEZERS

Product Information

01 General Specifications

a. Walk-in coolers and freezers shall be of a modular design and construction utilizing prefabricated insulated panels with metal skins. The panels shall allow for rapid, easy field assembly, disassembly, and modification by adding or exchanging for like panels.

b. Assembly shall be accomplished by use of a standard hexagonal (Allen) wrench rotating a cam-action hook-arm on the tongue side of the panel over the pin on the groove side of the adjacent panel which pulls and locks the panels together creating an airtight and vapor proof joint. Access ports for rotating the hook-arm shall be on the inside of the cooler and these access ports shall be sealed with vinyl snap-in plugs after walk-in construction.

c. Standard wall, ceiling, and floor panels shall be 46", 34-1/2", 23", and 11-1/2" wide. Standard corner panels shall be 13" x 13" at 90°. Standard 4" wall and ceiling panels shall be available in any length from 1' 0" to 16' 0". Standard 5-3/8" wall and ceiling panels shall be available in any length from 1' 0" to 24' 0". Panels can be manufactured in increments of 1" to meet customers design specifications.

d. Arctic is certified and labeled to NSF Standard 7 and UL Standard 471. Arctic conforms to all EISA requirements and standards. Arctic is an approved manufacturer for the State of Oregon, City of Houston and LARR.

02 Panel Construction

a. Panels shall be constructed with interior and exterior metal skins formed to precise dimensions to ensure proper fit. Metal finish shall be as specified.

b. Wall panel frames shall be molded of high density urethane with mating tongue and groove profiles. Standard 4" panels shall have a wide 2-1/2" tongue throat and standard 5-3/8" panels shall have a wide 4-1/4" tongue throat to ensure vapor proof and airtight joints.

c. Floor and ceiling panel frames should be molded of high density urethane U-Channels to ensure structural strength and durability. Standard 4" panels shall have a wide 2-1/2" tongue throat and standard 5-3/8" panels shall have a wide 4-1/4" tongue throat to ensure vapor proof and airtight joints.

d. Panels shall have heavy-gauge steel panel fasteners constructed of a precisely located camlock and mating steel pin.

e. Panels shall have NSF approved vinyl gasket on the tongue edge of the panel. Gasket color shall be either gray, white, or black to most closely match the metal skin color.

f. Panel core foam shall be UL Listed, Class 1 fire rated, urethane foam permanently bonded to the interior and exterior metal skins. Each walk-in shall have a label on the door frame assembly indicating certification to ASTM STD E84/UL STD 723.

g. Standard panels shall be interchangeable. Special panels shall be sized to meet specific requirements.

h. Corners shall be constructed of a corner panel which incorporates the corner in the panel providing superior strength and structural integrity over butted corners.

i. Panels shall meet NSF STD 7 and be EISA compliant.

j. Panels can meet customer's specifications with angled walls, notches, corner cut outs and sloped ceilings.

03 Insulation

a. Insulation shall be 4" or 5-3/8" thick and shall be "foamed-in-place" to form a rigid insulation block that is permanently bonded to the interior and exterior metal skins.

b. Panel core insulation shall be CFC-free Class 1 fire rated urethane. The core insulation shall be classified to UL 723 (ASTM E84) with a flame spread ≤25 and a smoke density of <450.

c. Insulation shall have a K factor ≤0.125 BTU/hr/sq.ft. per °F/inch at 20°F and ≤0.138 BTU/hr/sq.ft. per °F/inch at 55°F in accordance with ASTM C518-2004. The R factor for 4" thick cooler panels is 28 and for freezers is 32. The R factor for 5-3/8" thick cooler panels is 39 and for freezers is 43.

04 Finish

a. Interior and exterior wall and ceiling finish options are virtually limitless and are tailored to the functional and artistic needs of each customer and project. The most common finishes are: 26 gauge stucco embossed galvalume, 26 gauge stucco embossed bright G-90 galvanized steel, 26 gauge white stucco embossed galvalume, 26 gauge white stucco embossed G-90 galvanized steel, 26 gauge smooth galvalume, 26 gauge smooth bright G-90 galvanized steel, .032" stucco embossed aluminum, .040" smooth white aluminum, and 22 gauge #4 finish 304 stainless steel. Please contact your Arctic Sale Representative for additional information on the wide variety of custom materials, finishes and embossments available.

05 Electrical

a. Wiring shall be concealed in the interior of the door frame and foamed-in-place to eliminate internal conduit runs and provide a more sanitary and aesthetically look.

b. Standard electrical services requirements are 120 volt, 60 cycle, 1-phase, 15 amp circuit. Please contact your Arctic Sales Representative for accommodation of other electrical service requirements.

c. The interior wiring shall extend out the top of the door frame for the primary electrical power connection. For indoor applications the ceiling panel will have a corresponding hole to align with the door frame electrical power. For applications with auxiliary lighting a switched auxiliary wire shall also extend out the top of the door frame.

d. Field wiring of the primary electrical power connection and auxiliary lighting shall be the customers responsibility and be performed by a qualified electrician to the National Electric Code and all applicable local standards. Field wiring typically involves mounting a junction box on the roof of the cooler and routing the provided interior wiring into the junction box. Auxiliary lighting is typically wired from the outside of the cooler with penetrations made by the electrician into the cooler interior for connection to the auxiliary lighting. All field wiring must be properly sealed to prevent air leakage and condensation inside of the conduit and auxiliary light fixtures.

e. Door frames shall be provided with an integral ultra-bright LED temperature display and light switch.

f. Door frames shall be provided with a vapor proof light fixture on the interior centered above the door. This fixture shall be either a LED fixture or an Edison style base socket.

g. Arctic can install concealed electrical wiring with receptacles mounted flush within the interior/exterior of panels for specific customer needs.

h. Arctic can install concealed copper cold water lines up to ½" diameter pipe for specific customer needs.

06 Hinged Doors

a. Doors shall be of in-fitting and of flush construction and bear a label indicating electrical certification to UL STD 471.

b. Doors available in bi-parting if requested.

c. Walk-in cooler door jambs shall be constructed of structural FRP pultrusions with mitered corners that are foamed-in-place to provide superior rigidity and prevent twisting and door sag.

All walk-ins are certified to NSF Std. 7 and UL Std. 471 by Intertek

20.01a

d. Walk-in freezer door jambs shall be constructed of structural aluminum extrusions for freezers that are foamed-in-place to provide superior rigidity and prevent twisting and door sag.

e. Door plug frames shall be constructed of structural FRP pultrusions that are foamed-in-place to provide a flat door plug of accurate dimensions.

f. Door frame and plug insulation shall be the same as specified for the panels.

g. Door thresholds shall be 1/8" aluminum unless otherwise specified.

h. Standard door size shall provide for a 34" wide x 78" tall clear opening provided with two cam rise, spring loaded, chrome hinges. Hinges are fastened to two layers of 14 gauge galvanized steel backing foamed-in-place in the door frame and door plug.

i. Hinged door sizes of widths up to 6' 0" and heights up to 20' 0" can be provided. Additional hinges are provided as requested by the customer and as dictated by engineering requirements for larger doors.

j. Doors shall be provided with an NSF approved one-piece magnetic gasket for a positive seal.

k. Doors shall be provided with a butyl rubber gasket mounted to the bottom edge of the door.

l. Door handles shall be provided with a cylinder lock and an inside release. Multiple options available on request.

m. Doors that access ambient air conditions shall be provided with a vinyl strip curtain.

n. Freezer doors shall be supplied with a frame and threshold heater.

o. Freezer doors shall be supplied with a heated air vent.

p. In applications that require a kickplate, the plate shall be flush with the door metal and not include an overlay.

q. Optional features are available to meet customer and project requirements. Common optional features are heated and non-heated viewports, internal and external aluminum diamond plate or stainless

07 Sliding Doors

a. Doors shall be overhead mounted with two layers of ¾" exterior grade plywood backing foamed-in-place to provide a structural mounting location for sliding door hardware.

b. Door core foam shall be UL Listed, Class 1 fire rated, urethane foam permanently bonded to the interior and exterior metal skins. Each walk-in shall have a label indicating certification to ASTM STD E84/UL STD 723.

c. Doors shall be of a finish material selected by customer.

d. Door plug frames shall be constructed of treated 2" lumber.

e. Door gaskets shall be resilient flexible vinyl tested to ASTM STD E4257. Walk-in cooler floor gasket shall be of the single bulb sweeper type. Walk-in freezer gasket shall be of the dual sweeper type mounted in a "U" channel. Side and top gaskets shall be of the large bulb type and mounted to the inside perimeter of the door.

f. Pre-assembled one-piece trolley assembly features heavy extruded aluminum chassis with heavy-duty 3-1/2" diameter nylon-clad stainless steel ball bearing rollers. Built-in anti-lift feature and deep-seated rollers prevent derailing and provide stability.

g. Rail and track are rugged, corrosion resistant extruded aluminum for quick response and straight, sure tracking even with maximum door load.

h. Track ramps are tough, smooth acetal for long wear and easy sliding. "Down-and-in" action provides easier door operation, yet ensures a tight door seal in combination with the lower guide.

i. Micro-leveling feature allows for vertical door adjustment to maintain door seal, even where floors are uneven or after sweeper gasket is worn. Adjustment nuts are located up front for easy access.

j. Large exterior pull-handle of chrome plated, die-cast zinc and steel recessed inside pull handle shall be provided.

08 Floors

a. Floors are optional and when provided floor construction and insulation shall be the same as specified for wall panels.

b. Floors are rated to withstand a uniformly distributed stationary load of 1,200 per square foot. Heavy duty structural floors are available when specified. Please contact your Arctic Sale Representative for additional information.

c. Floor wear surface shall be smooth aluminum. Other floor wear surfaces are available and include but are not limited to 16 gauge 304 #4 finish stainless steel and aluminum diamond tread plate. Please contact your Arctic Sale Representative for additional information.

d. Ramp wear surfaces are 16 gauge stainless steel or aluminum diamond treadplate with a ½" wood backer foamed-in-place to structural cross supports.

e. NSF cove to be formed and foamed-in-place in floor panels.

f. Floorless walk-in coolers shall be provided with steel "U" channel and integral NSF 6" cove for field installation by customer both inside and out.

g. Cooler floor panels are available in thicknesses ranging from 2" to 5-3/8".

09 Closures and Trim

a. Matching ceiling closure panels and vertical trim strips for finishing between walk-in walls and building walls and building ceiling shall be supplied when specified and noted on the approved project drawings. Customer may select any style of custom configuration to meet job site needs.

10 Accessories

A wide array of optional accessories are offered to meet the exact customer and project requirements. Some of the more common accessories provided are:

a. Viewports (windows) on doors

b. Windows on walls

c. Reach-In doors; solid or glass

d. Aluminum and stainless steel bumper rails and hat channels.

e. 3-way light switches

f. A wide range of LED lighting options

g. Outdoor roof membrane packages, multiple colors.

h. Alarm systems (temperature, door ajar, panic alarm, etc.)

i. Alarm systems can be wired to multiple boxes, to a remote communicator for a connection to a customer is monitoring system.

j. Clear View single or bi-parting swing doors.

k. Foamed-in-place backing for attachment of shelving or other structural requirements

l. Doors positioned right up against the adjacent wall with zero jamb clearance.

m. Wide variety of glass reach-in doors in sizes and colors to meet customer specifications. Shelving and LED lights included.

n. Diamond Treadplate or Stainless Steel, 36" -48" wainscoting for interior or exterior installation to protect walls.

o. Cooler floor panels as thin as 2".

p. Corners at an angle ranging from 0 - 180°

q. Seismic engineered stamped drawings and seismic mounting components

r. Please contact your Arctic Sales Representative for accessories to meet your unique requirements.

11 Refrigeration

a. A comprehensive selection of refrigeration systems, air and water-cooled, in top mount self-contained, pre-assembled remote, and remote configurations are available to meet the exact customer and project requirements.

b. Evaporators that are of low profile, center mount, or medium profile with a maximum 70' throw. Coils can be manufactured with rust proof coating to meet customer's specific product needs.

12 Warranty

a. Panels shall include a 15-year performance warranty, doors and door assemblies shall include a 5-year materials and workmanship warranty, and refrigeration shall include a 1-year parts and labor warranty.

c. Warranty is only valid if walk-in and refrigeration is installed by a factory authorized installer incorporating ASHRAE standards and practices.

d. This is a warranty summary only. The actual walk-in warranty is governed by our complete warrant document which may be found at https://www.arcticwalkins.com/literature-3/miscellaneous/.

Please note that we have a continuous product development and improvement program which may result in change without notice to this specification.

CMA
RESTAURANT SUPPLY & DESIGN, INC.

Submittal Sheet

04/21/2026

ITEM# 23 - COOLER CONDENSING UNIT (1 EA REQ'D)

Arctic

Cooler refrigeration condensing unit.

BCH0008MCACYA0000 - SUBMITTAL

Project Name:	QUOTE R4122368	Project Location:	US
Quote ID:	R4123166	Item #:	3010
Submitted For:	-	Submitted On:	04/09/2026
Submitted By:	Rusty Brown	Submitted From:	-
Identity #:	-	Tag:	-
System Description:	Split system	System Tag:	Cooler Combo

☐ For Record ☐ For Approval By:_____ Date:_____

General Product Information

Product Family:	HTS	Compressor Brand:	Copeland
Application:	Outdoor	Compressor Type:	Scroll
Temperature Range:	Medium Temp	Compressor Hp:	0.8
Voltage: (Volts/Ph/Hz)	208-230/3/60	Compressor Model:	YB07KAE
Refrigerant Type:	R454A	Number of Compressor(s):	1
Piping:	Standard	Coil Type:	Microchannel

Technical Information

Performance Data

Ambient Temperature (°F)	Saturated Suction Temperature (°F)	Application Capacity* (BTU/H)	Altitude (ft)	AWEF Value
95	23.18	7758.0	0	7.6

Electrical Data

Compressor(s)		Fan Motor(s)			Electric Ratings						
RLA	LRA	Quantity	Hp	FLA	Defrost Type	High or Low Amps?	Number of Contactors	MCA	MOPD	Evap.Fan Amps	Defrost Heater Amps
4.7	37.8	1	1/15	0.5	AIR DEFROST	-	-	15	15	5	15

Unit Specifications

Connections (in.)		Receiver 90% Full (lbs)		Fan Blade(s) Diameter (in)	Sound Data (dB)	Approx. Net Weight (lbs)
Liquid Line	Suction	Standard	Over Sized			
3/8	5/8	9	-	14	61	168

Dimensional Drawing(s)

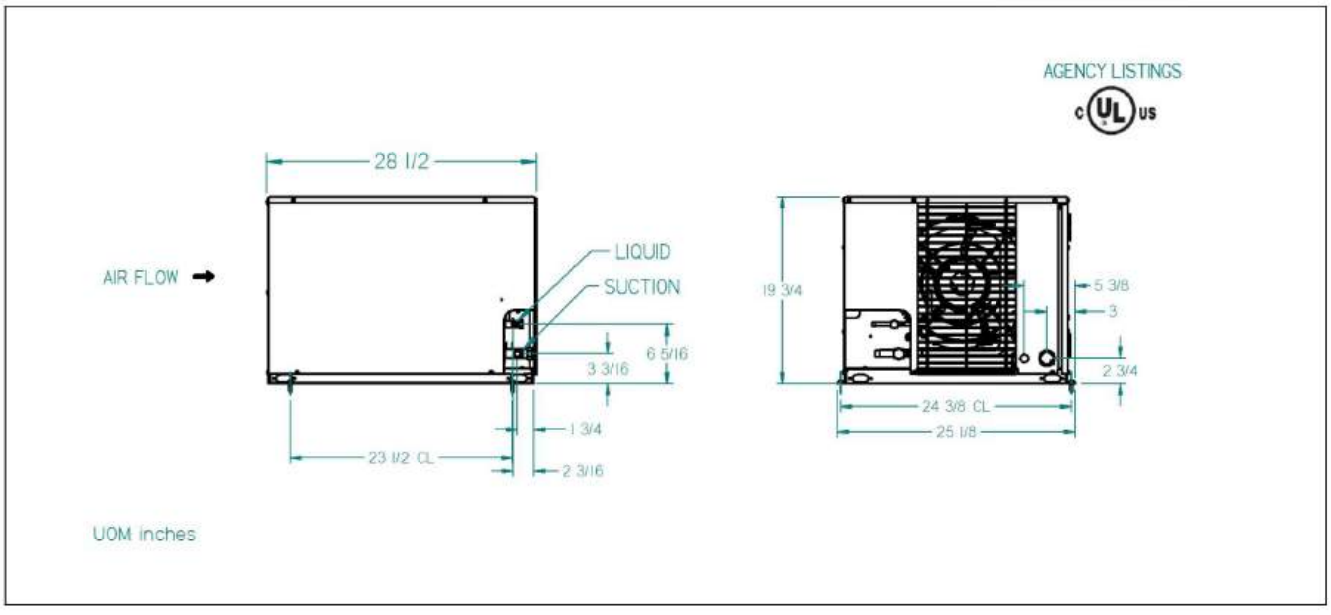

BCH0008MCACYA0000 - SUBMITTAL

Project Name:	*QUOTE R4122368*	*Project Location:*	*US*
Quote ID:	*R4123166*	*Item #:*	*3010*
Submitted For:	*-*	*Submitted On:*	*04/09/2026*
Submitted By:	*Rusty Brown*	*Submitted From:*	*-*
Identity #:	*-*	*Tag:*	*-*
System Description:	*Split system*	*System Tag:*	*Cooler Combo*

Standard Features

CABINET AND CONSTRUCTION

- MICROCHANNEL COIL TECHNOLOGY STANDARD ON ALL UNITS
- PAINTED STEEL CABINETS FOR SUPERIOR STRENGTH AND CORROSION PROTECTION
- HEAVY DUTY, STEEL, 1-1/2" TALL BASE

SERVICEABILITY

- SUCTION SERVICE VALVES FOR HERMETIC AND SCROLL COMPRESSORS LOCATED OUTSIDE THE CABINET FOR QUICK INSTALLATIONS.
- RECEIVER WITH FUSIBLE PLUG, LIQUID SHUTOFF VALVE AND CHARGING PORT IS STANDARD
- LARGE ELECTRICAL PANEL FOR EASE OF ACCESS
- PREFABRICATED WIRING HARNESSES FOR TIGHT CRIMP CONNECTIONS AND CONSISTENT LABELING
- UNIT STAYS ON IF THE HOOD IS REMOVED FOR SERVICING
- SIGHT GLASS IS EASILY VIEWABLE

QUALITY

- ALL UNITS ARE COMPLETELY LEAK TESTED IN A HELIUM ENVIRONMENT, BUMP TESTED AND ALLOWED TO CYCLE OFF ON THE HIGH AND LOW PRESSURE CONTROL. EACH UNIT HAS A COPY OF THE RUN DATA SHIPPED INSIDE THE ELECTRICAL PANEL
- ELECTRICAL CIRCUITS ARE COMPLETELY CHECKED FOR CONTINUITY
- PIPING IS LAID OUT TO MINIMIZE STRESS AND VIBRATION AND IS PRE-BENT TO ELIMINATE LEAKS
- ENCAPSULATED, AUTO-RESET, HIGH AND LOW PRESSURE CONTROLS TO ELIMINATE LEAKS (ADJUSTABLE LOW PRESSURE CONTROL STANDARD)

Options

Mounted Options

- Preferred Package Code - A0000
- Motor - FIXED SPEED EC
- Receiver Options - STANDARD
- Liquid Line Options - FILTER DRIER AND SIGHT GLASS
- Discharge Line Options - HEAD PRESSURE VALVE 145#
- Fused Disconnect - NO FUSED DISCONNECT
- Crankcase Heater - CRANKCASE HEATER
- Snow Legs - NONE
- Brand Label - BOHN
- Coil Selection - MICROCHANNEL COIL
- Defrost Timer Options - NO TIMER
- Suction Line Options - SUCTION TUBE ONLY
- Cabinet Selection - Painted
- Pressure Options - ADJUSTABLE LOW - FIXED HIGH
- Phase Loss Monitor - NONE
- Hail Guard Factory Installed - NONE

Minimum Unit Clearances

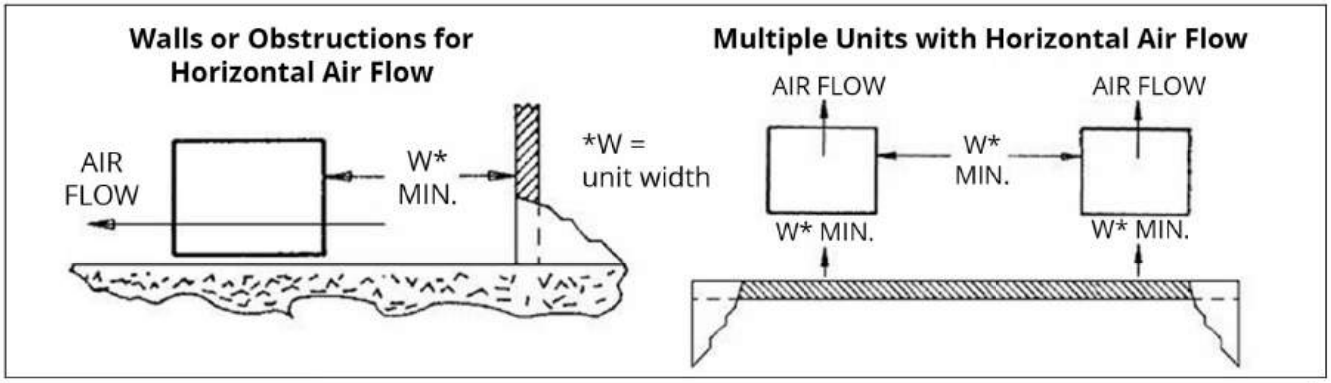

Notes

** Capacities shown are Application Capacities reflecting nominal operation at 10°F TD. For models within the scope of the DOE AWEF (Annual Walk-in Energy Factor) standard, the Net Capacity is determined by the AHRI 1250 test method. DOE will publish this compliance data at www.regulations.doe.gov*

** Units using A2L refrigerants must be installed in accordance with UL 60335-2-89 and ASHRAE 15 standard*

** Per ASHRAE Standard 15, fusible plugs and pressure relief valves may need to be externally piped when using flammable refrigerants*

**Only refrigerants in compliance with New York state regulations can be used in the state of New York.*

CMA
RESTAURANT SUPPLY & DESIGN, INC.

Submittal Sheet

04/21/2026

ITEM# 24 - COOLER EVAPORATOR COIL (1 EA REQ'D)

Arctic

Cooler evaporator coil fan to hang inside of the walk in cooler.

BEL060A Y6AMA - SUBMITTAL

Project Name:	QUOTE R4122368	Project Location:	US
Quote ID:	R4123166	Item #:	3020
Submitted For:	-	Submitted On:	04/09/2026
Submitted By:	Rusty Brown	Submitted From:	-
Identity #:	-	Tag:	-
System Description:	Split system	System Tag:	Cooler Combo

☐ For Record ☐ For Approval By:_____ Date:_____

General Product Information

Product Family:	BEL	Motor type	2 SPEED EC
Defrost Type:	Air	Number of Fans:	1
Voltage: (Volts/Ph/Hz)	115/1/60	Fan HorsePower	1/20
Refrigerant Type:	R454A	Fins per Inch	6
Minimum Room Area: (ft^2)	23 (9.0ft height)	Mitigation Zone:	Volume

Technical Information

Performance Data

Capacity			Air Flow				Altitude (ft)	AWEF Value	
TD (°F)	SST (°F)	Application Capacity* (BTU/H)	CFM	Fan Diameter (in.)	Air Throw (ft)				
					Standard	w/Collar		Cooler > 32	Freezer <= 32
9.82	23.18	7,900	610	12	-	-	0	9	N/A

Electrical Data

Fan Motor(s)		Defrost Heater(s)		Drain pan Heater(s) HG	
Watts	Amps	Watts	Amps	Watts	Amps
55	0.85	-	-	-	-

Unit Specifications

Connections (in.)						Approx. Net Weight (lbs)
Coil Inlet	Suction	External Equalizer	Drain	Side Port	Hot Gas Drain Pan	
1/2	5/8	1/4	3/4	-	-	36

Dimensional Drawing(s)

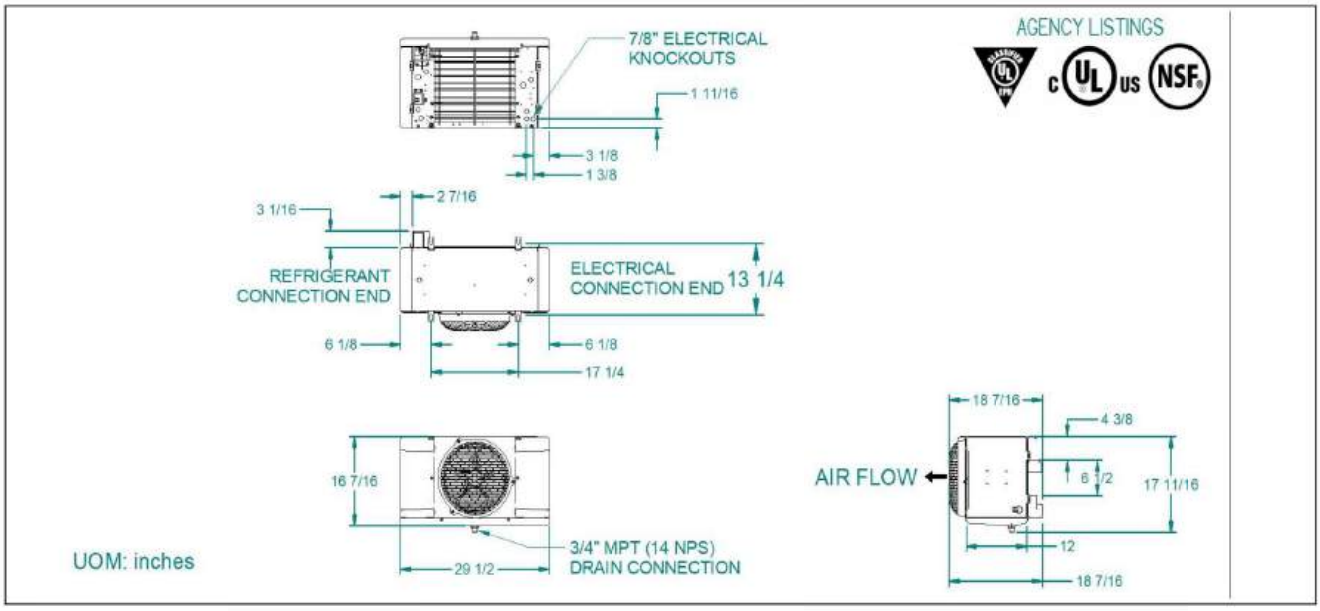

BELUGUA YUAMA - SUBMITTAL

Project Name:	*QUOTE R4122368*	*Project Location:*	*US*
Quote ID:	*R4123166*	*Item #:*	*3020*
Submitted For:	*-*	*Submitted On:*	*04/09/2026*
Submitted By:	*Rusty Brown*	*Submitted From:*	*-*
Identity #:	*-*	*Tag:*	*-*
System Description:	*Split system*	*System Tag:*	*Cooler Combo*

Standard Features

EASE OF INSTALLATION SERVICE

- ALL ELECTRICAL COMPONENTS FACTORY WIRED TO TERMINAL BOARD AND IDENTIFIED, MAKING IT EASY TO FIELD WIRE THE UNIT
- CABINET DESIGN FEATURES HINGED, REMOVABLE FRONT ACCESS PANELS ON EACH SIDE FOR EASY ACCESS TO ELECTRICAL AND REFRIGERATION COMPONENTS
- LIQUID LINE SOLENOID WIRE HARNESS IS FACTORY-INSTALLED FOR QUICK INSTALLATION
- MOTORS PLUG INTO WIRING HARNESS FOR EASIER SERVICING
- HINGED, REMOVABLE DRAIN PAN FOR EASY AND SAFE ACCESS
- PRE-DRILLED HOLES ON THE BACK OF THE UNIT FOR ROOM THERMOSTAT
- QUICK REMOVAL FAN GUARD/MOTOR ASSEMBLY FOR EASY SERVICE OR REPLACEMENT OF AIR MOVER PARTS

PERFORMANCE

- INTERNAL PANELS ARE ISOLATED FOR QUIET OPERATION
- INTERNALLY ENHANCED TUBING AND FIN DESIGN FOR HIGHER EFFICIENCY
- EC MOTORS STANDARD ON ALL MODELS FOR IMPROVED UNIT EFFICIENCY

RELIABLE DURABLE

- HEAVY GAUGE GRAINED ALUMINUM CABINET CLEANS EASILY AND LOOKS ATTRACTIVE
- MOLDED FAN GUARD AND ACCESS PANELS ARE MADE OF STRONG, DURABLE, AND NSF AND UL SANITATION RATED PLASTIC MATERIAL
- SWEAT CONNECTIONS TO REDUCE POTENTIAL FOR LEAKS

VERSATILE

- LARGE DIAMETER DRAIN HOLE (3/4 " ID) IS LOCATED TOWARDS THE BACK OF THE UNIT
- MINIMAL HEIGHT OF THE LOW PROFILE SERIES MAKES IT IDEAL FOR LOW CEILING COOLERS

Options

Mounted Options

- Brand Label - BOHN
- DTFD Option - None
- Fan Guard - Molded
- Drain Pan Type - Stucco
- Control Communication - YES
- Fin Material - Aluminum
- iNTELLIGEN WebServer/Multi-System Control Card Add on - NO
- Saturated Suction Temperature - 25
- Customer Specified Valve Type - EEV
- Refrigerant Detection System - Factory Installed
- Motor - 2 Speed EC
- Fan Blade - Standard
- Cabinet Type - Stucco
- Controller Option - Intelligen
- Defrost Control - None
- iNTELLIGEN Integration Card Add On - NO
- Coil Mechanical Option - Intelligen
- Liquid Temperature - 95
- Valve Family - L

Custom Options

Description	Quantity
WHITE CABINET	1

Shipped-Loose Options (Unit)

(QTY)Part Number - Description	(QTY)Part Number - Description
(1) 29338301 - VALVE-SOLENOID, 3/8 SSOV3S130 W COIL	(1) 29308801 - VALVE-CHECK, A2L, 1/2, CSOV-4S

Minimum Unit Clearances

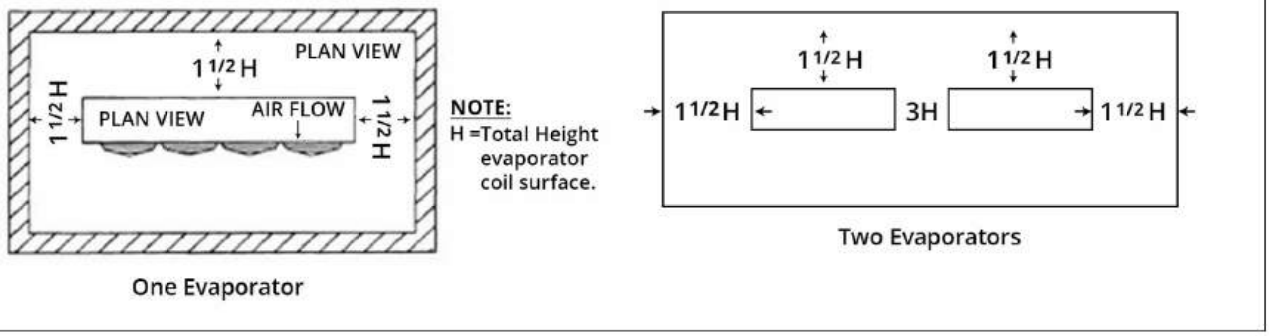

Notes

** Capacities shown are Application Capacities reflecting nominal operation at 10°F TD. For models within the scope of the DOE AWEF (Annual Walk-in Energy Factor) standard, the Net Capacity is determined by the AHRI 1250 test method. DOE will publish this compliance data at www.regulations.doe.gov*

** Unit coolers using A2L refrigerants must be installed in accordance with UL 60335-2-89 and ASHRAE 15 standards*

CMA
RESTAURANT SUPPLY & DESIGN, INC.

Submittal Sheet

04/21/2026

ITEM# 25 - FLOOR TROUGH (1 EA REQ'D)

Pacific Stainless FT5412-SG

Floor Trough, 54"W x 12"D, removable stainless steel subway-style grating, 4" deep trough pan with built-in pitch toward drain, 3" I.P.S. x 3" drain tail piece (no hub connection), 14/304 stainless steel construction, NSF, Made in USA

<Incomplete>

The spec sheet for this item can be viewed on item 1)

ACCESSORIES

Mfr	Qty	Model	Spec
Pacific Stainless	1	FTBD	<Incomplete> Optional Box Drain, Made in USA

CMA
RESTAURANT SUPPLY & DESIGN, INC.

Submittal Sheet

04/21/2026

ITEM# 103 - HOOK AND RAIL SYSTEM (1 EA REQ'D)

Tonon Shelving USA

PRELIMINARY QUESTIONNAIRE FOR QUOTATION OF SIMPLEX MEAT RAIL SYSTEM

Load capacity pulley
150 kg
(330 lb)



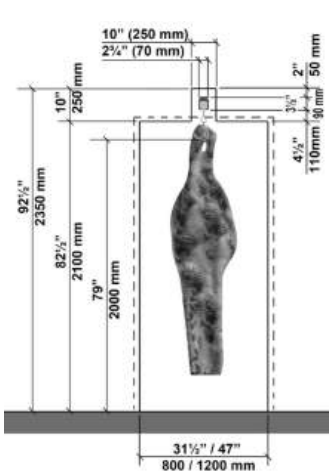

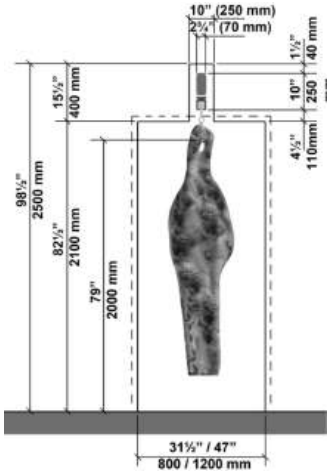

N° pulleys .....

Suitable for quarter beef

☐ H 2000 mm (79″) ☐ H 2100 mm (82½″)

☐ For more than 150 kg (330 lb) load capacity, refer to Silver/Gold meat rail



Load capacity pulley
300 / 700 kg
660 / 1543 lb

Hook's height
H 2850 / 3000 mm (112″ / 118″)







Load device with security system

☐ Terminal n°.....
☐ Central n°.....



☐ Lowering rail section

Distance from meat rail

..... mm



Electronic scale - Length ..... mm

Pre-Arrangement ☐ only n°.....
Not ☐ certified n°.....
Certified ☐ n°.....



Device for pulley block on rail

n°.....



Folding shelf width 375 mm (15″)

☐ Poliethylene n°.....
☐ Aluminum n°.....

Hooks for framework, bar dimensions 75x25 mm (3″x1″)



"S" shape hook 160 x 6 mm
(6¼″ x ¼″)
n° .....



Thermoplastic hook
50 kg (110 lb)
load capacity
n° .....



Thermoplastic hook
110 kg (220 lb)
load capacity
n° .....

SIMPLEX “STANDARD” MEAT RAIL FOR COLDROOM

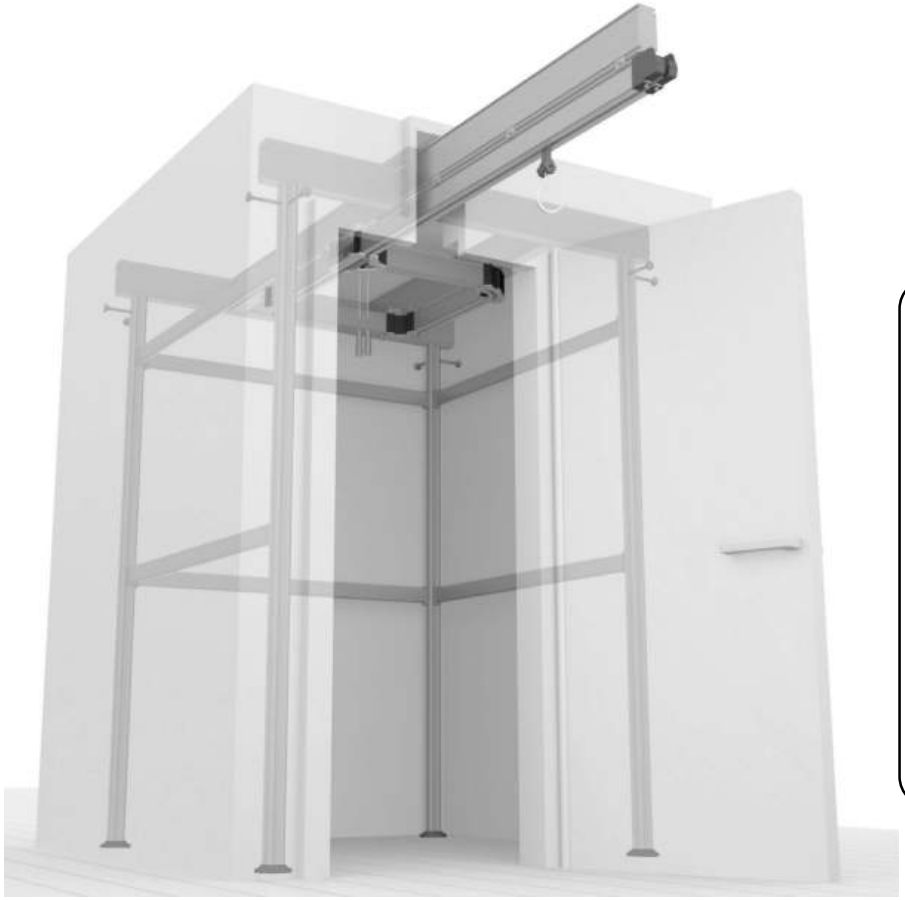

Height specifications

Hook	2000 mm (79″)
Under meat rail	2210 mm (87″)
Under beam	2310 mm (91″)
Upper hanger	2085 mm (82″)
Lower hanger	1135 mm (44½″)
Max Structure	2500 mm (98½″)

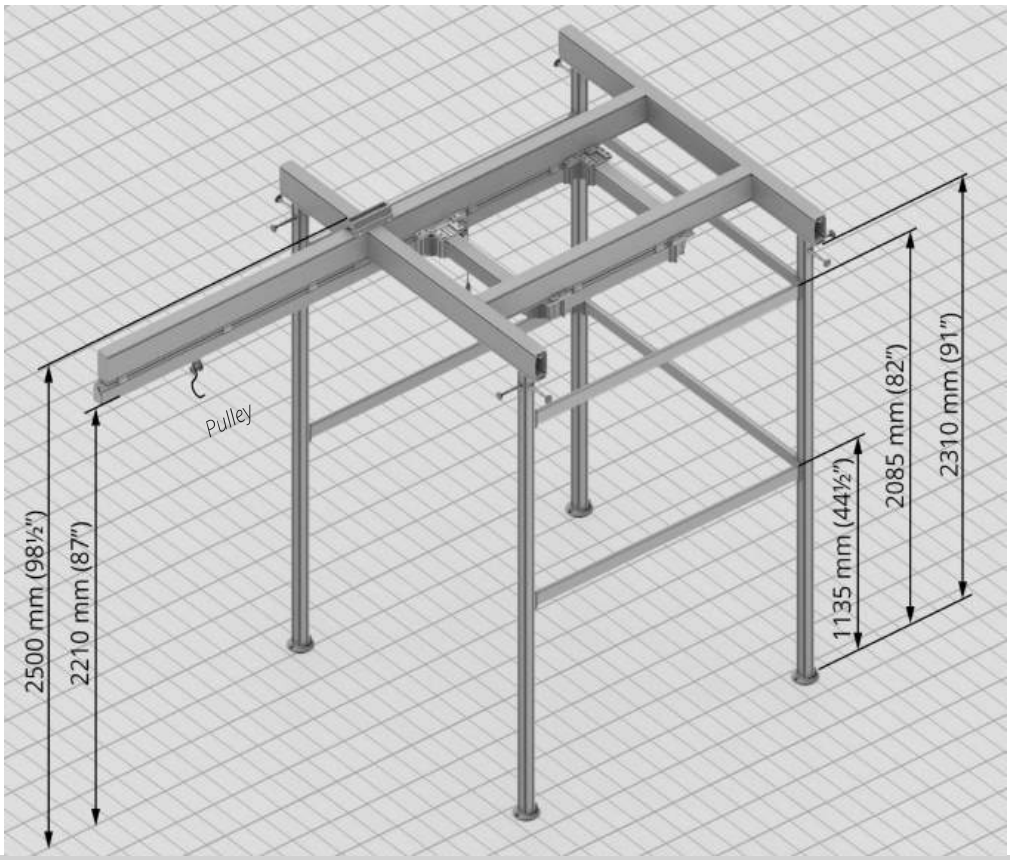

CMA
RESTAURANT SUPPLY & DESIGN, INC.

Submittal Sheet

04/21/2026

ITEM# 26 - SPARE NO.

<Spare No.>

Description: Spare No.

Notes:

CMA RESTAURANT SUPPLY & DESIGN, INC.

Submittal Sheet

04/21/2026

ITEM# 27 - FLOOR TROUGH (1 EA REQ'D)

Pacific Stainless FT8412-SG

Floor Trough, 84"W x 12"D, removable stainless steel subway-style grating, 4" deep trough pan with built-in pitch toward drain, 3" I.P.S. x 3" drain tail piece (no hub connection), 14/304 stainless steel construction, NSF, Made in USA

The spec sheet for this item can be viewed on item 1)

ACCESSORIES

Mfr	Qty	Model	Spec
Pacific Stainless	1	FTBD	Optional Box Drain, Made in USA

CMA
RESTAURANT SUPPLY & DESIGN, INC.

Submittal Sheet

04/21/2026

ITEM# 28 - HOSE REEL (1 EA REQ'D)

T&S Brass B-7222-C01XS1E

Hose Reel Assembly, enclosed, 3/8" x 30 ft. hose with high flow blue spray valve with swivel (EB-0107), 8" wall mount mixing faucet, quarter-turn Eterna compression cartridges with spring checks, lever handles with color coded indexes, continuous pressure vacuum breaker, 3/8" NPT x 36" flexible water hose connector with stainless steel quick disconnect, ratcheting system, multi-fit bracket & adjustable hose bumper, (2) 2-3/8" wall brackets, EasyInstall 16" & rigid 40" risers, epoxy coated steel hose reel, polished chrome-plated brass faucet body, 1/2" NPT female inlets

ACCESSORIES

Mfr	Qty	Model	Spec
T&S Brass	1		1 year limited warranty, standard
T&S Brass	1		1 year limited warranty for hose, standard
T&S Brass	1		2 year limited warranty for hose reel, standard

T&S BRASS AND BRONZE WORKS, INC.
2 Saddleback Cove / P.O. Box 1088
Travelers Rest, SC 29690

Travelers Rest, SC: 800-476-4103 • Simi Valley, CA: 800-423-0150 • Fax: 864-834-3518 • www.tsbrass.com

Model No.
B-7222-C01XS1E
Item No.

This Space for Architect/Engineer Approval

Job Name_____Date_____

Model Specified_____ Quantity_____

Customer/Wholesaler_____

Contractor_____

Architect/Engineer_____

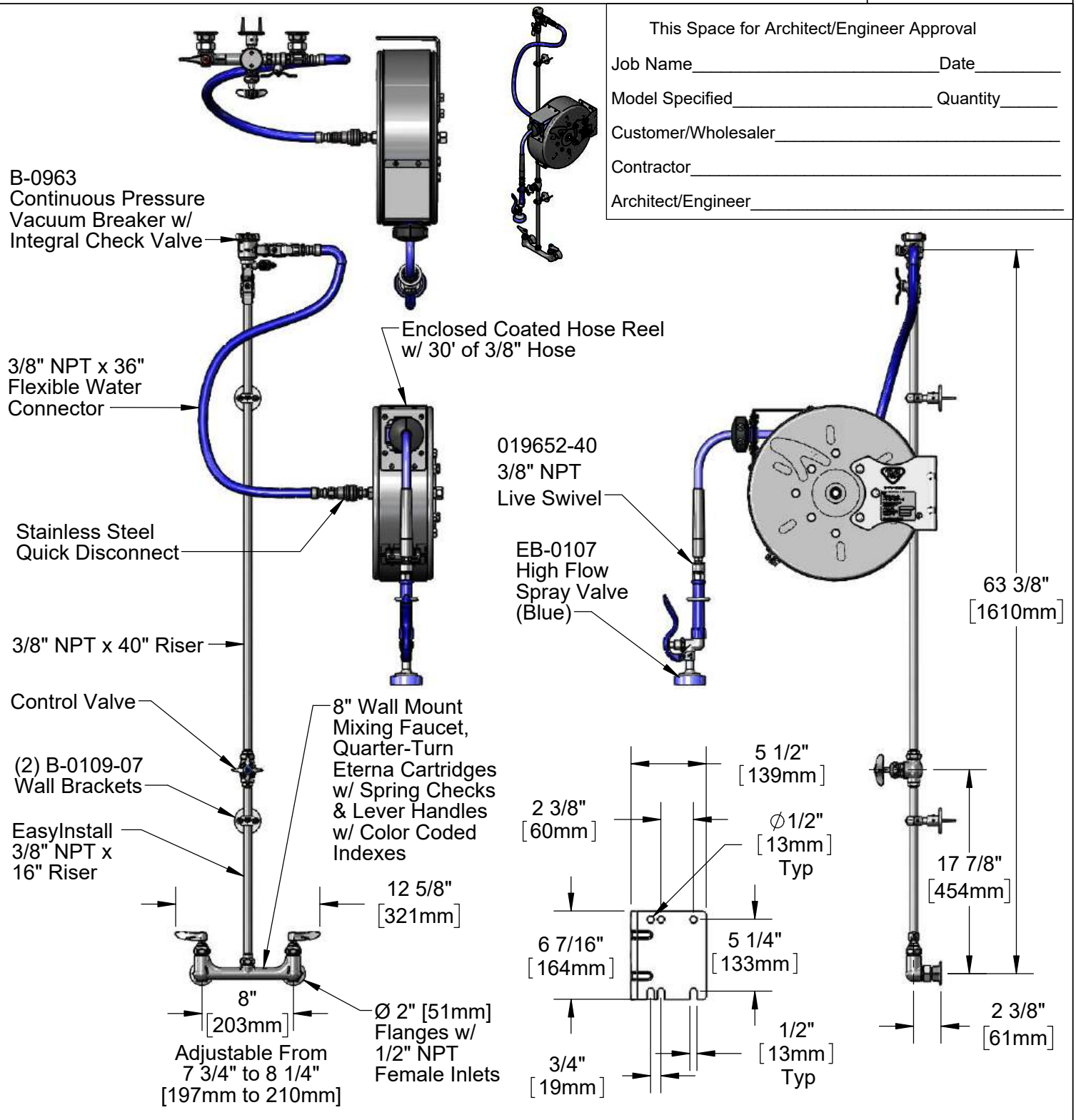

Product Specifications:
Enclosed Coated Hose Reel w/ 30' of 3/8" Hose, High Flow Spray Valve (Blue) w/ Swivel, Vacuum Breaker, 3/8" NPT Flexible Water Connector, 8" Wall Mount Mixing Faucet w/ Quarter-Turn Eterna Cartridges w/ Spring Checks & Control Valve

Product Compliance:
NSF 61 Exempt (Non-Potable)
2019 DOE PRSV Non-Compliant
ASSE 1056 (VB)

Drawn: KJG	Checked: JRM	Approved: JHB	Date: 02/18/19	Scale: 1:12	Sheet: 1 of 2

T&S BRASS AND BRONZE WORKS, INC.
2 Saddleback Cove / P.O. Box 1088
Travelers Rest, SC 29690

Travelers Rest, SC: 800-476-4103 • Simi Valley, CA: 800-423-0150 • Fax: 864-834-3518 • www.tsbrass.com

Model No.
B-7222-C01XS1E
Item No.

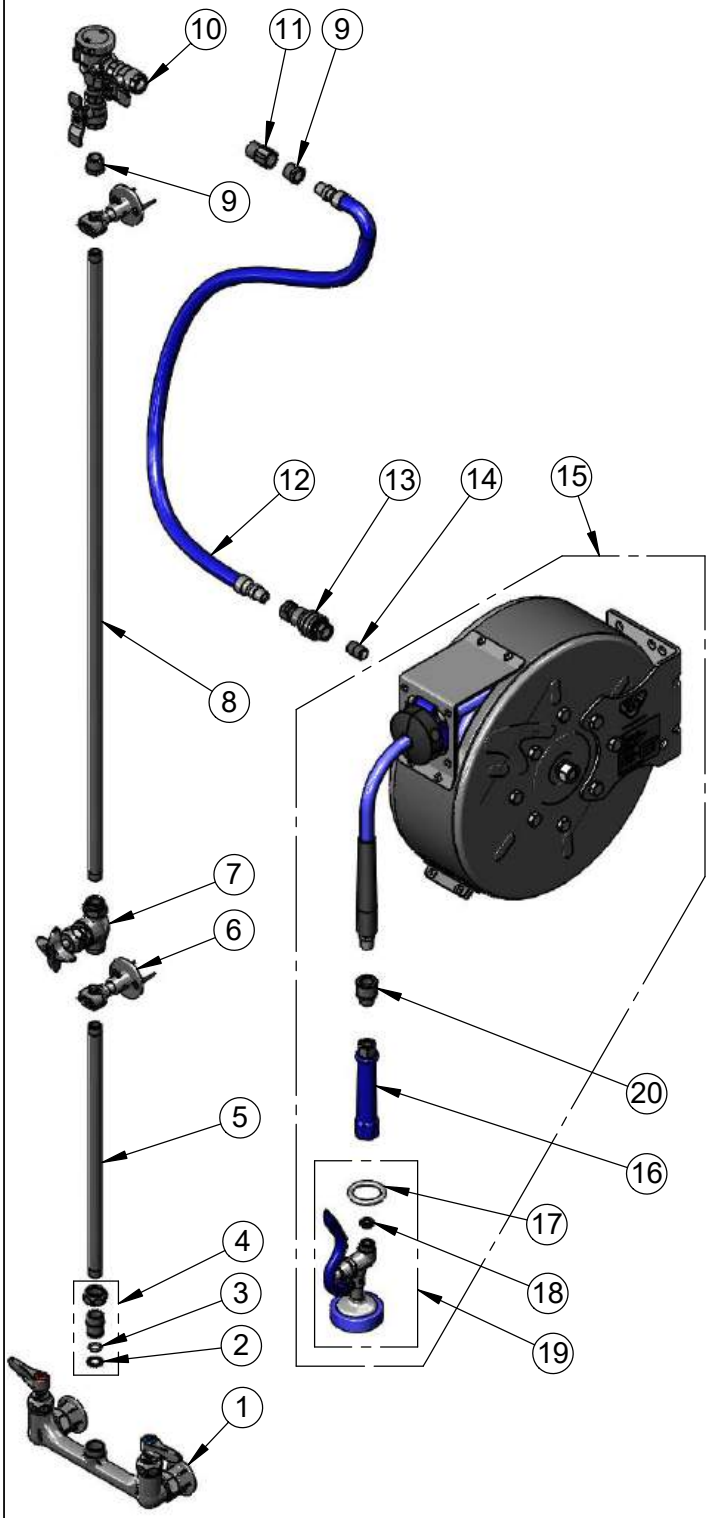

ITEM NO.	SALES NO.	DESCRIPTION
1	B-0230-LN	8" Wall Mount Mixing Faucet
2	014200-45	Star Washer, Anti-Rotation
3	001065-45	O-Ring
4	EZ-K	EasyInstall Kit
5	000368-40	Nipple, 3/8" x 16"
6	B-0109-07	Wall Bracket
7	0RK3	Control Valve
8	002558-40	3/8" NPT x 40" Riser
9	001359-40	Hex Bushing, 1/2" NPT Male x 3/8" NPT Female
10	B-0963	1/2" NPT Continuous Pressure Vacuum Breaker w/ Integral Check Valve
11	015073-40	Check Valve w/ 1/2" NPT Adapter
12	HW-2B-36	3/8" NPT x 36" Flexible Water Hose
13	AW-5B	3/8" NPT Quick Disconnect
14	002535-25	3/8" Close Nipple
15	B-7222-C01	Enclosed Hose Reel w/ 3/8" x 30' Hose
16	012504-40	Grip Handle (Blue), 3/8" NPT
17	000907-45	Spray Valve Hold Down Ring
18	010476-45	#27 Washer
19	EB-0107	High Flow Spray Valve (Blue)
20	019652-40	3/8" NPT Live Swivel

Product Specifications:
Enclosed Coated Hose Reel w/ 30' of 3/8" Hose, High Flow Spray Valve (Blue) w/ Swivel, Vacuum Breaker, 3/8" NPT Flexible Water Connector, 8" Wall Mount Mixing Faucet w/ Quarter-Turn Eterna Cartridges w/ Spring Checks & Control Valve

Product Compliance:
NSF 61 Exempt (Non-Potable)
2019 DOE PRSV Non-Compliant
ASSE 1056 (VB)

Drawn:	KJG	Checked:	JRM	Approved:	JHB	Date:	02/18/19	Scale:	NTS	Sheet:	2 of 2

CMA
RESTAURANT SUPPLY & DESIGN, INC.

Submittal Sheet

04/21/2026

ITEM# 29 - WORK TABLE, STAINLESS STEEL TOP (2 EA REQ'D)

Eagle Group T3072SEB-HA

ADA/Ergonomic Height Adjustable Work Table, 72"W x 30"D , 32"-40" adjustable height, 525 lbs capacity, 16/304 stainless steel top, folding crank case handle, Uni-Lok® gusset system, adjustable stainless steel undershelf with marine edge, stainless steel legs & adjustable bullet feet

ACCESSORIES

Mfr	Qty	Model	Spec
Eagle Group	2		Crank case located on left end of work table, add suffix (-L)
Eagle Group	2	A205341	Heavy Duty Caster, swivel with brake, 5" diameter, 250 lbs capacity, urethane

Profit from the Eagle Advantage®

Specification Sheet

Item No.: _____
Project No.: _____
S.I.S. No.: _____

ADA/Ergonomic Height Adjustable Tables

MODELS:

- ❑ ***T24*SEB-HA***
- ❑ ***T24*SE-HA***
- ❑ ***T24*SEB-BS-HA***
- ❑ ***T24*SE-BS-HA***
- ❑ ***T30*SEB-HA***
- ❑ ***T30*SE-HA***
- ❑ ***T30*SEB-BS-HA***
- ❑ ***T30*SE-BS-HA***

Short Form Specifications

Eagle ADA/Ergonomic Height Adjustable Table, model _____. Tables available with 14/304 or 16/304 stainless steel tops. All with 90˚ downturn sides and 1½˝ rolled front edge. Rear edges can be ordered with 1½˝ roll or a 4˝-high back splash. Tabletops come in standard sizes of 24˝ x 48˝/60˝/72˝ or 30˝ x 48˝/60˝/72˝. All tops are reinforced with stainless steel hat and leg channels, with patented uni-lok® gusset system. Legs are 1⅝˝ O.D. stainless steel, with 1½˝ O.D. stainless steel expanding sections. Standard 1˝ stainless steel adjustable bullet feet are included. Heavy gauge stainless steel adjustable undershelf with marine edge. Crank pump case can be located on the left, right or center of the table.



#T2448SE-HA-R shown

Design & Construction Features

- Infinite working heights between 32˝ and 40˝ (813 and 1016mm)—8˝ (203mm) of adjustability.
- 525-575 lb. weight capacity, depending on size of table

Tabletop

- Patented uni-lok® gusset system (patent # 5,165,349).
- All tabletops reinforced with stainless steel hat and leg channels, with 90° downturn sides and 1½˝ (38mm) rolled front edge.
- Offered in 16 gauge type 304 or 14 gauge type 304 stainless steel construction.
- Rear edges can be ordered with 1½˝ (38mm) roll or a 4˝ (102mm)-high back splash.
- Crank pump case, with folding handle, can be located on the left, right, or center of the table.
- Works with 20˝ (508mm) standard drawers

Undershelf

- Heavy gauge stainless steel adjustable undershelf with marine edge.

Legs

- 1⅝˝ (41mm) O.D. stainless steel legs, with 1½˝ (38mm) O.D. stainless steel expanding sections.
- 1˝ (25mm) stainless steel adjustable bullet feet.

Options / Accessories

❑ Consult factory for add-on accessories

EAGLE GROUP
100 Industrial Boulevard, Clayton, DE 19938-8903 USA
Phone: 302-653-3000 • 800-441-8440 • Fax: 302-653-2065
www.eaglegrp.com
www.eaglegrpnews.com
www.eaglemhc.com

Certifications / Approvals

NSF

AutoQuotes

KCL

For custom configuration or fabrication needs, contact our **SpecFAB® Division.**
Phone: 302-653-3000 • Fax: 302-653-2065 • e-mail: quotes@eaglegrp.com

EG10.37 Rev. 08/23

Spec sheets available for viewing, printing or downloading from our online literature library at our websites

Eagle Foodservice Equipment, Eagle MHC, and SpecFAB® are divisions of Eagle Group. ©2023 by the Eagle Group

EG10.37

Catalog Specification Sheet No.

ADA/Ergonomic Height Adjustable Tables

Profit from the Eagle Advantage®

Item No.: _____
Project No.: _____
S.I.S. No.: _____

ADA/Ergonomic Height Adjustable Tables

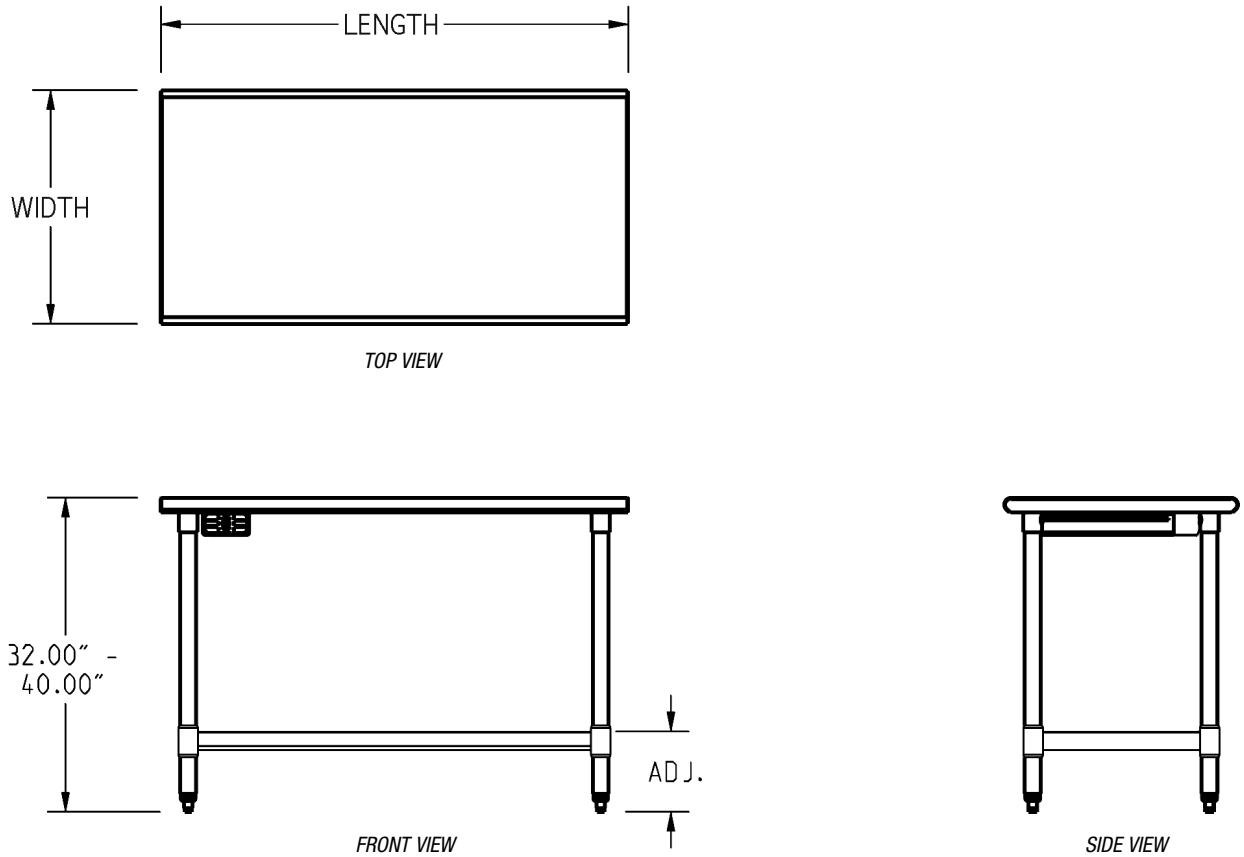

(FLAT TOP TABLE SHOWN WITH CRANK HANDLE AT LEFT END)

To indicate location of crank case, add suffix "**-L**" (left end), "**-R**" (right end), or "**-C**" (center) at end of model number. Example: T2448-SE-HA**-L**

width		length		weight cap.		with Flat Top		with 4˝ (76mm) Backsplash	
in.	mm	in.	mm	lbs.	kg	16/304 top model #	14/304 top model #	16/304 top model #	14/304 top model #
24˝	610	48˝	1219	575	260.8	*T2448SEB-HA*	*T2448SE-HA*	*T2448SEB-BS-HA*	*T2448SE-BS-HA*
24˝	610	60˝	1524	550	249.5	*T2460SEB-HA*	*T2460SE-HA*	*T2460SEB-BS-HA*	*T2460SE-BS-HA*
24˝	610	72˝	1829	525	238.1	*T2472SEB-HA*	*T2472SE-HA*	*T2472SEB-BS-HA*	*T2472SE-BS-HA*
30˝	762	48˝	1219	575	260.8	*T3048SEB-HA*	*T3048SE-HA*	*T3048SEB-BS-HA*	*T3048SE-BS-HA*
30˝	762	60˝	1524	550	249.5	*T3060SEB-HA*	*T3060SE-HA*	*T3060SEB-BS-HA*	*T3060SE-BS-HA*
30˝	762	72˝	1829	525	238.1	*T3072SEB-HA*	*T3072SE-HA*	*T3072SEB-BS-HA*	*T3072SE-BS-HA*

EAGLE GROUP
100 Industrial Boulevard, Clayton, DE 19938-8903 USA
Phone: 302-653-3000 or 800-441-8440 • Fax: 302-653-2065
www.eaglegrp.com • www.eaglegrpnews.com • www.eaglemhc.com

Printed in U.S.A.
©2023 by Eagle Group
Rev. 08/23

Spec sheets available for viewing, printing or downloading from our online literature library at our websites

Although every attempt has been made to ensure the accuracy of the information provided, we cannot be held responsible for typographical or printing errors. Information and specifications are subject to change without notice. Please confirm at time of order.

CMA
RESTAURANT SUPPLY & DESIGN, INC.

Submittal Sheet

04/21/2026

ITEM# 30 - FLOOR TROUGH (1 EA REQ'D)

Pacific Stainless FT8412-SG

Floor Trough, 84"W x 12"D, removable stainless steel subway-style grating, 4" deep trough pan with built-in pitch toward drain, 3" I.P.S. x 3" drain tail piece (no hub connection), 14/304 stainless steel construction, NSF, Made in USA

The spec sheet for this item can be viewed on item 1)

ACCESSORIES

Mfr	Qty	Model	Spec
Pacific Stainless	1	FTBD	Optional Box Drain, Made in USA

CMA
RESTAURANT SUPPLY & DESIGN, INC.

Submittal Sheet

04/21/2026

ITEM# 31 - SPARE NO.

<Spare No.>

Description: Spare No.

Notes:

CMA
RESTAURANT SUPPLY & DESIGN, INC.

Submittal Sheet

04/21/2026

ITEM# 32 - SPARE NO.

<Spare No.>

Description: Spare No.

Notes:

CMA
RESTAURANT SUPPLY & DESIGN, INC.

Submittal Sheet

04/21/2026

ITEM# 33 - ONE (1) COMPARTMENT PREP SINK (1 EA REQ'D)

Pacific Stainless CUSTOM

Sink, one compartment, 18" x 24" x 14" deep sink with 54" right hand side drain board 77" overall length. 10" backsplash with lever waste, and 2 holes in splash for faucet

<Incomplete>

Compartment Sinks - "C10" Series Backsplash - One Drainboard
1 Sink - Part # - SCS####-1#-_##

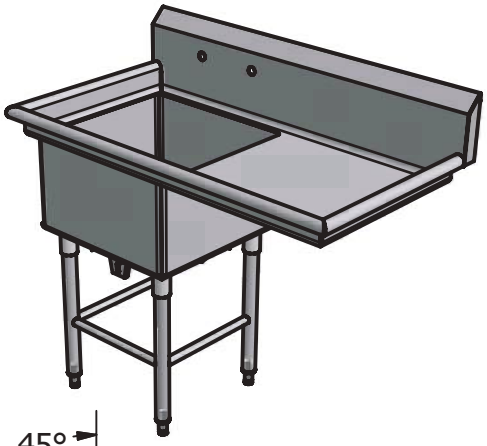

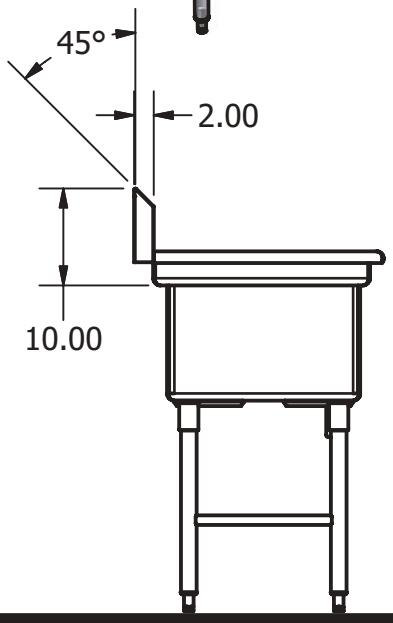

Item#: _____ Qty: ____

Model#: _____

NSF

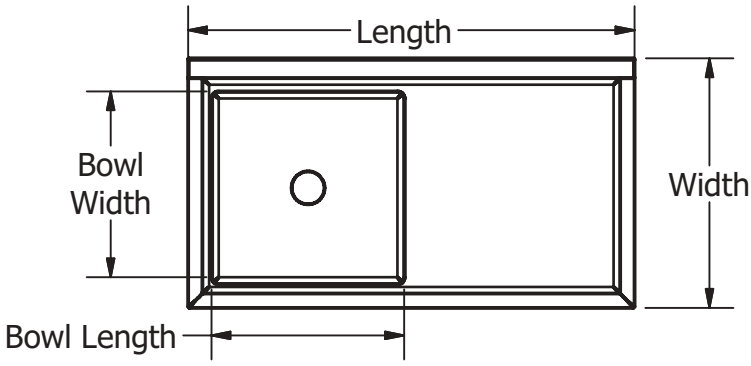

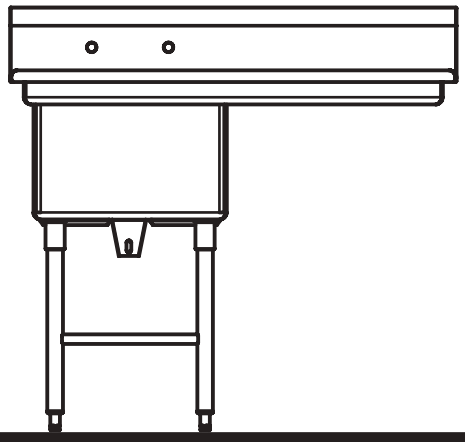

Features:

"Standard" / 16 Gauge Construction

* 16 Gauge Type 304 Stainless Steel Construction w/ #4 Finish
* 12" Deep Bowl
* "H" Leg Assembly w/ 1" Stretcher on Front

"Spec-Line" / 14 Gauge Construction

* 14 Gauge Type 304 Stainless Steel Construction w/ #4 Finish
* 14" Deep Bowl
* "H" Leg Assembly w/ 1.625" Stretcher on Front

General Description:

* 10" x 2" Backsplash, 45 deg. return, with 1/2" turn down for mounting to wall clip (2 each - 4" wall clips included)
* 220 deg. sanitary rolled rim edge on all free edges, 3" high
* Horizontal and vertical sink corners are coved at 5/8" radius, welded and finished to form a one piece unit
* All sinks come with basket drains and 1 1/8" faucet holes punched in backsplash on 8" centers
* "Spec-Line" multiple sinks will have a front bath skirt, Standard will have sealing strip
* Rotary drain handle brackets included (does not include rotary drain)
* 1 5/8" Stainless Steel round tube legs with adjustable feet (adj. Flange feet available as an option)
* Drainboards 30" or longer have additional leg support under each drainboard

Options:

Options:	Model Number	U/M
Twist Handle Waste Outlet	CHGD50-7200	Each
Twist Handle Waste Outlet w/ Overflow	CHD50-7215	Each
Type 316 Stainless Steel Twist Handle Waste Outlet	CHGDSS-8000	Each
Adjustable Flanged Feet w/ Mounting Holes	CHGA10-0854	Each
Wall Faucet with 12" Spout	CHGKN13-8012	Each
Sink Covers	SSC-MOD	Each

Orders Phone 888-618-2122 Fax 503-397-9596 www.pacificstainless.com

Pacific Stainless PRODUCTS, INC.

Compartment Sinks

"C10" Series - One Drainboard - Single Sink - Table Lengths (72" to 108")



Right Hand Drainboard



Left Hand Drainboard

SINK - L" x W"	OVERALL - L" x W"	MODEL	MODEL
16" x 18"	36.5" x 24"	SCS 1618 -16- R18	SCS 1618 -16- L18
16" x 18"	42.5" x 24"	SCS 1618 -16- R24	SCS 1618 -16- L24
16" x 18"	48.5" x 24"	SCS 1618 -16- R30	SCS 1618 -16- L30
16" x 18"	54.5" x 24"	SCS 1618 -16- R36	SCS 1618 -16- L36
16" x 20"	36.5" x 26"	SCS 1620 -16- R18	SCS 1620 -16- L18
16" x 20"	42.5" x 26"	SCS 1620 -16- R24	SCS 1620 -16- L24
16" x 20"	48.5" x 26"	SCS 1620 -16- R30	SCS 1620 -16- L30
16" x 20"	54.5" x 26"	SCS 1620 -16- R36	SCS 1620 -16- L36
18" x 18"	38.5" x 24"	SCS 1818 -16- R18	SCS 1818 -16- L18
18" x 18"	44.5" x 24"	SCS 1818 -16- R24	SCS 1818 -16- L24
18" x 18"	50.5" x 24"	SCS 1818 -16- R30	SCS 1818 -16- L30
18" x 18"	56.5" x 24"	SCS 1818 -16- R36	SCS 1818 -16- L36
18" x 24"	38.5" x 30"	SCS 1824 -16- R18	SCS 1824 -16- L18
18" x 24"	44.5" x 30"	SCS 1824 -16- R24	SCS 1824 -16- L24
18" x 24"	50.5" x 30"	SCS 1824 -16- R30	SCS 1824 -16- L30
18" x 24"	56.5" x 30"	SCS 1824 -16- R36	SCS 1824 -16- L36
20" x 20"	40.5" x 26"	SCS 2020 -16- R18	SCS 2020 -16- L18
20" x 20"	46.5" x 26"	SCS 2020 -16- R24	SCS 2020 -16- L24
20" x 20"	52.5" x 26"	SCS 2020 -16- R30	SCS 2020 -16- L30
20" x 20"	58.5" x 26"	SCS 2020 -16- R36	SCS 2020 -16- L36
20" x 28"	42.5" x 34"	SCS 2028 -16- R18	SCS 2028 -16- L18
20" x 28"	48.5" x 34"	SCS 2028 -16- R24	SCS 2028 -16- L24
20" x 28"	52.5" x 34"	SCS 2028 -16- R30	SCS 2028 -16- L30
20" x 28"	58.5" x 34"	SCS 2028 -16- R36	SCS 2028 -16- L36
24" x 24"	50.5" x 30"	SCS 2424 -16- R18	SCS 2424 -16- L18
24" x 24"	56.5" x 30"	SCS 2424 -16- R24	SCS 2424 -16- L24
24" x 24"	62.5" x 30"	SCS 2424 -16- R30	SCS 2424 -16- L30
24" x 30"	50.5" x 36"	SCS 2430 -16- R36	SCS 2430 -16- L36
24" x 30"	56.5" x 36"	SCS 2430 -16- R18	SCS 2430 -16- L18
24" x 30"	62.5" x 36"	SCS 2430 -16- R24	SCS 2430 -16- L24
30" x 30"	62.5" x 36"	SCS 3030 -16- R30	SCS 3030 -16- L30
30" x 30"	68.5" x 36"	SCS 3030 -16- R36	SCS 3030 -16- L36

Phone 888.618.2122 Fax 503.397.9596 E-mail info@pacificstainless.com

Pacific Stainless PRODUCTS, INC.

CMA
RESTAURANT SUPPLY & DESIGN, INC.

Submittal Sheet

04/21/2026

ITEM# 34 - SPLASH MOUNT FAUCET WITH PRE RINSE SPRAY (1 EA REQ'D)

T&S Brass B-0133-01

EasyInstall Pre-Rinse Unit, mixing faucet, 8" wall mount, 14" add-on 063X swing nozzle, 18" riser, overhead spring, lever handles, 56" flex hose, Eterna cartridges, spray valve (B-0107), 9" wall support (B-0109-02), 1/2" male NPT, EPAct2005 Compliant

ACCESSORIES

Mfr	Qty	Model	Spec
T&S Brass	1	B-1105-KIT	Inlet Kit, 1/2"NPT close elbows, 24" flex supply hoses

T&S BRASS AND BRONZE WORKS, INC.
2 Saddleback Cove / P.O. Box 1088
Travelers Rest, SC 29690
Travelers Rest, SC: 800-476-4103 • Simi Valley, CA: 800-423-0150 • Fax: 864-834-3518 • www.tsbrass.com

Model No.
B-0133-01
Item No.

This Space for Architect/Engineer Approval

Job Name_____Date_____
Model Specified_____ Quantity_____
Customer/Wholesaler_____
Contractor_____
Architect/Engineer_____

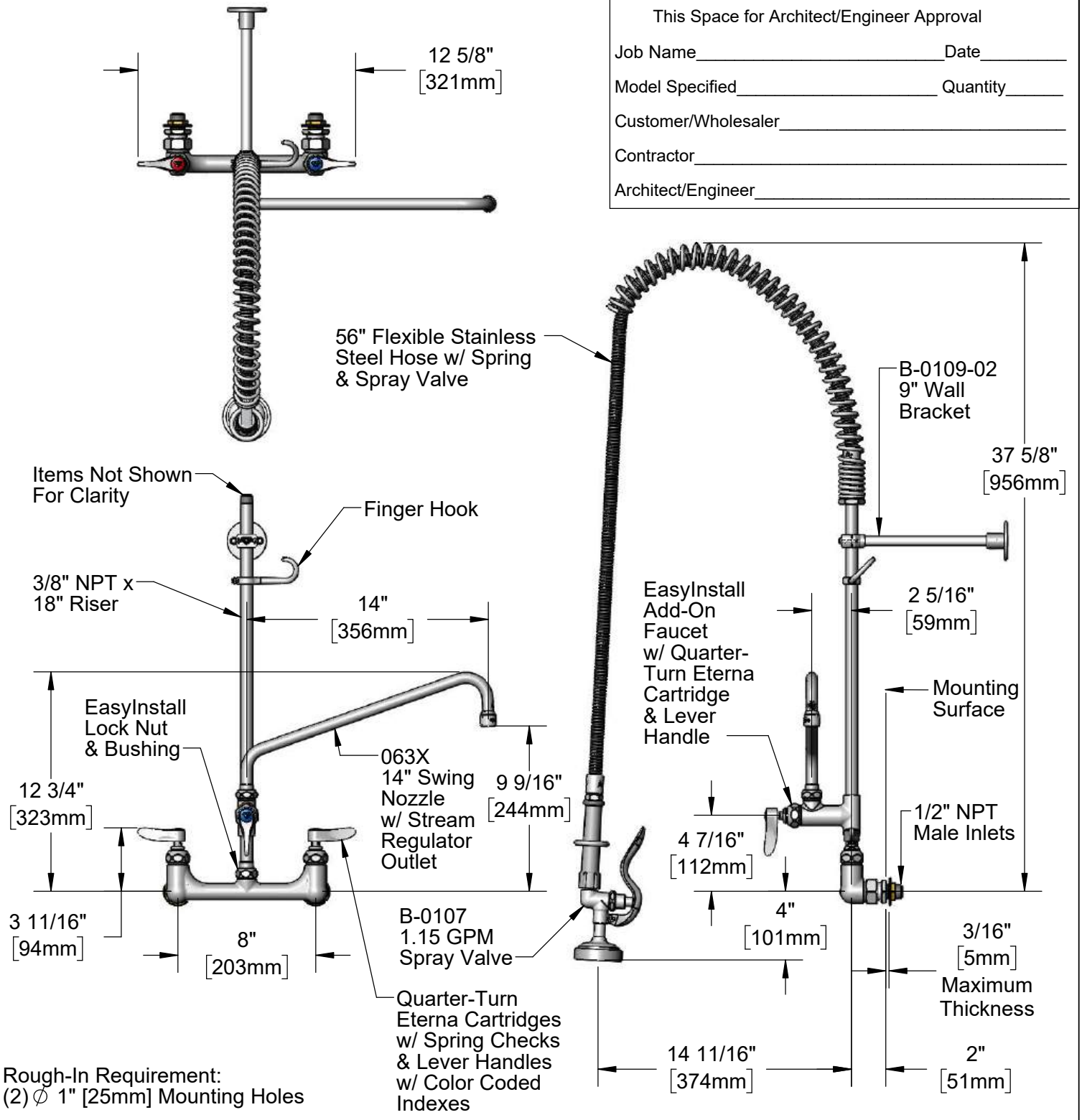

Product Specifications:
Pre-Rinse Unit: EasyInstall 8" Wall Mount Mixing Faucet, Quarter-Turn Eterna Cartridges w/ Spring Checks, Lever Handles, Add-On Faucet, 14" Swing Nozzle, 56" Flexible Stainless Steel Hose, 1.15 GPM Spray Valve, 9" Wall Bracket & 1/2" NPT Male Inlets

Product Compliance:
ASME A112.18.1 / CSA B125.1
NSF 61 - Section 9
NSF 372 (Low Lead Content)
2019 DOE PRSV - Class II

Drawn: LSA	Checked: KJG	Approved: JHB	Date: 03/03/20	Scale: 1:8	Sheet: 1 of 2

T&S BRASS AND BRONZE WORKS, INC.
2 Saddleback Cove / P.O. Box 1088
Travelers Rest, SC 29690

Travelers Rest, SC: 800-476-4103 • Simi Valley, CA: 800-423-0150 • Fax: 864-834-3518 • www.tsbrass.com

Model No.
B-0133-01

Item No.

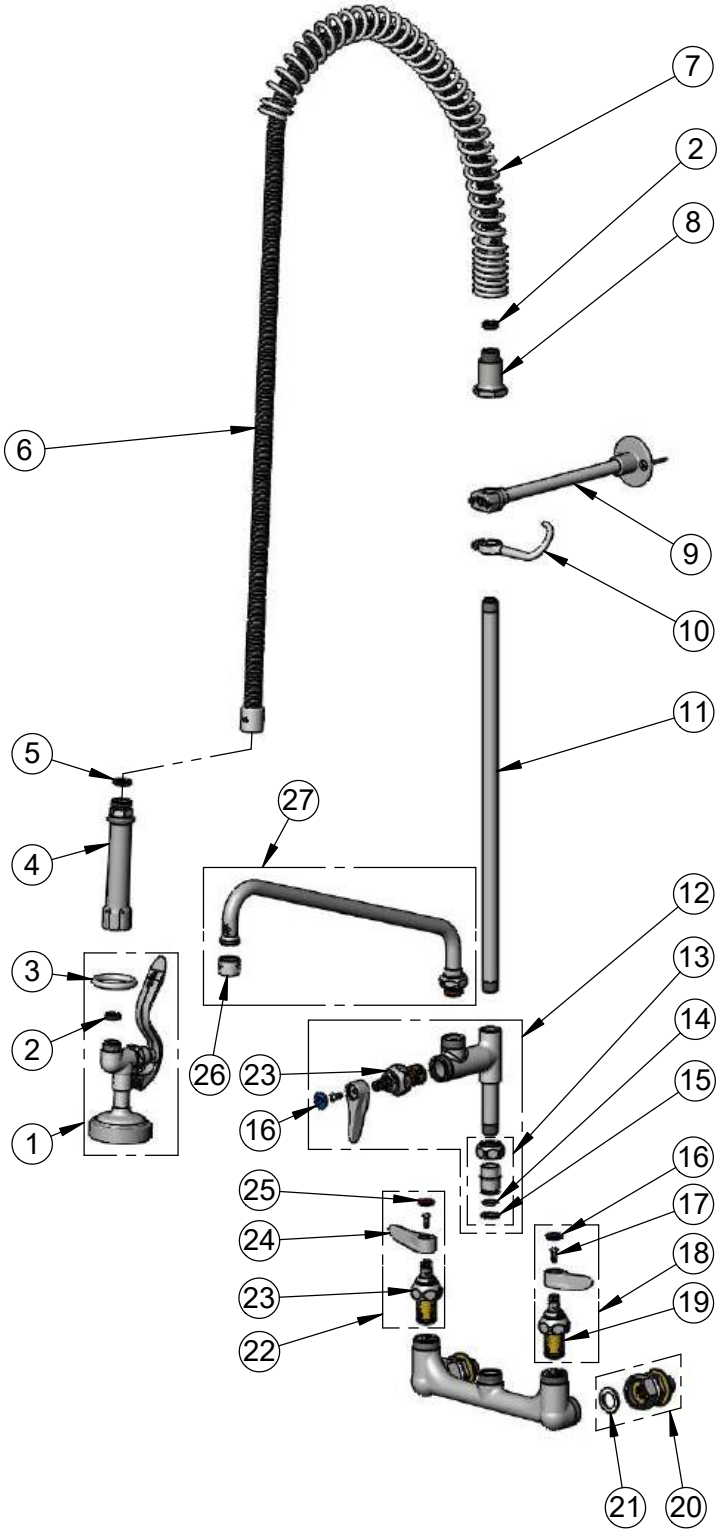

ITEM NO.	SALES NO.	DESCRIPTION
1	B-0107	1.15 GPM Spray Valve
2	010476-45	#27 Washer
3	000907-45	Spray Valve Hold Down Ring
4	002987-40	Grip Handle
5	001014-45	Washer, B-0100 Hose Barrel
6	B-0056-H2A	56" Flexible Stainless Steel Hose, Less Handle
7	000888-45	EasyInstall Overhead Spring
8	000821-40	Spring Body
9	B-0109-02	9" Wall Bracket
10	004R	Finger Hook
11	000369-40	3/8" NPT x 18" Riser
12	B-0155-LNEZ	EasyInstall Add-On Faucet w/ Quarter-Turn Eterna Cartridge, RTC & Lever Handle, Less Nozzle
13	EZ-K	EasyInstall Kit
14	001065-45	O-Ring
15	014200-45	Star Washer, Anti-Rotation
16	018506-19NS	Blue Button Index, Press-in
17	000925-45	Lab Handle Screw
18	002711-40NS	Quarter-Turn Eterna Cartridge w/ Spring Check, Handle, Blue Index & Screw, LTC
19	012442-40NS	Quarter-Turn Eterna Cartridge w/ Spring Check, LTC
20	00CC	1/2" NPT Male Inlet Flange
21	001019-45	Coupling Nut Washer
22	002712-40NS	Quarter-Turn Eterna Cartridge w/ Spring Check, Handle, Red Index & Screw, RTC
23	012443-40NS	Quarter-Turn Eterna Cartridge w/ Spring Check, RTC
24	001638-45NS	Lever Handle (New Style)
25	001193-19NS	Red Button Index, Press-in
26	B-PT	Full Flow Stream Regulator, 55/64-27
27	063X	14" Swing Nozzle

Product Specifications:
Pre-Rinse Unit: EasyInstall 8" Wall Mount Mixing Faucet, Quarter-Turn Eterna Cartridges w/ Spring Checks, Lever Handles, Add-On Faucet, 14" Swing Nozzle, 56" Flexible Stainless Steel Hose, 1.15 GPM Spray Valve, 9" Wall Bracket & 1/2" NPT Male Inlets

Product Compliance:
ASME A112.18.1 / CSA B125.1
NSF 61 - Section 9
NSF 372 (Low Lead Content)
2019 DOE PRSV - Class II

Drawn:	Checked:	Approved:	Date:	Scale:	Sheet:
LSA	KJG	JHB	03/03/20	NTS	2 of 2

T&S BRASS AND BRONZE WORKS, INC.
2 Saddleback Cove / P.O. Box 1088
Travelers Rest, SC 29690

REG. #A2601
ISO #9001

Travelers Rest, SC: 800-476-4103 Simi Valley, CA: 800-423-0150 Fax: 864-834-3518 www.tsbrass.com

Model No.
B-1105-KIT

Item No.

This Space for Architect/Engineer Approval

Job Name_____Date_____

Model Specified_____ Quantity_____

Customer/Wholesaler_____

Contractor_____

Architect/Engineer_____

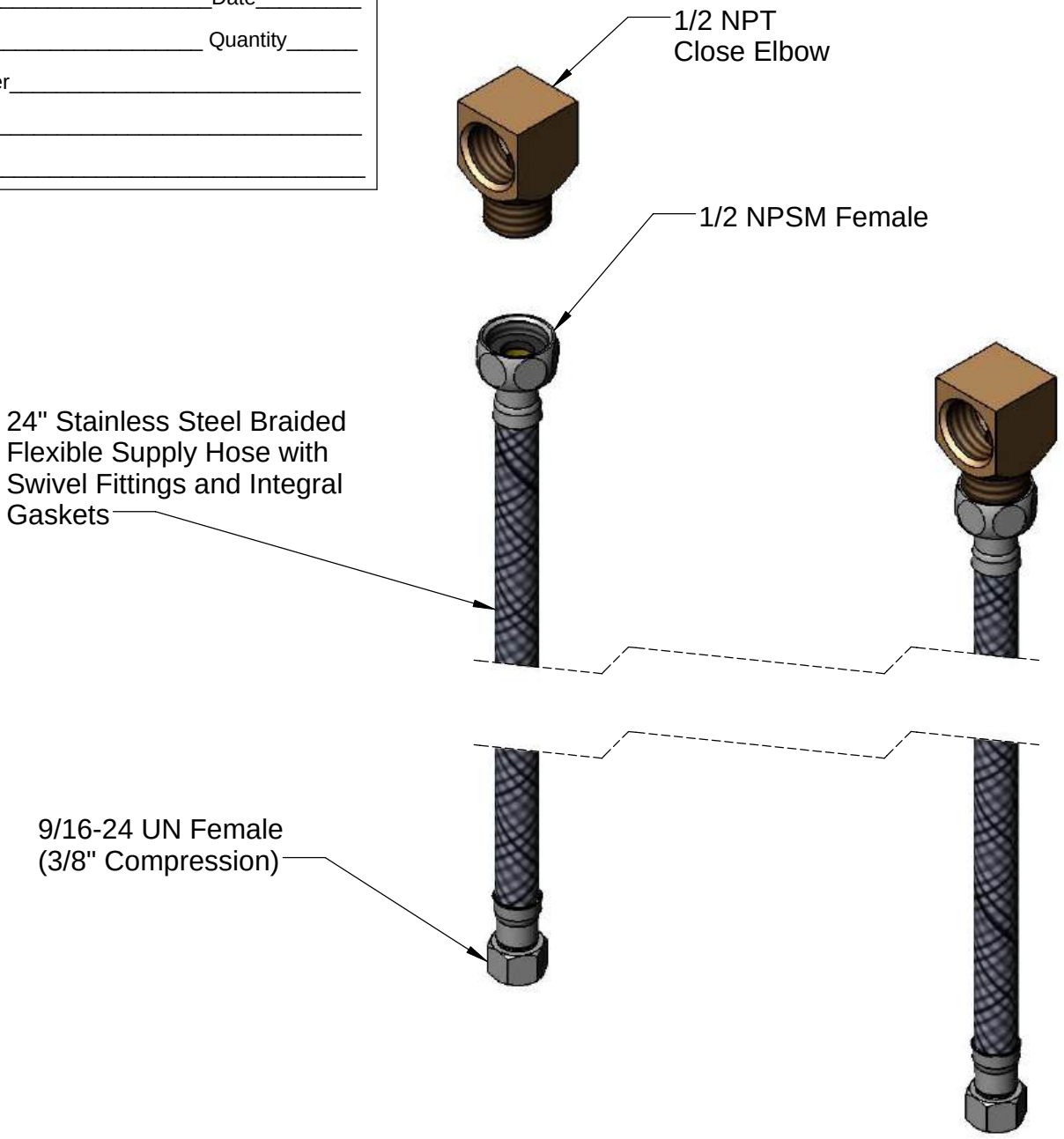

(2) Sets Supplied per Kit

Product Specifications:

Inlet Kit:
1/2 NPT Close Elbows and 24" Flexible Supply Hoses

Drawn	Checked	Approved
GEF	JRM	JHB
Scale: 1:2		Date: 10/14/08

Sheet: 1 of 2

T&S BRASS AND BRONZE WORKS, INC.
2 Saddleback Cove / P.O. Box 1088
Travelers Rest, SC 29690

REG. #A2601
ISO #9001

Travelers Rest, SC: 800-476-4103 Simi Valley, CA: 800-423-0150 Fax: 864-834-3518 www.tsbrass.com

Model No.
B-1105-KIT

Item No.

ITEM NO.	SALES NO.	DESCRIPTION
1	B-1100-K	Elbow Kit (2 Elbows per Kit)
2	017420-45	24" Flexible Supply Hose (Sold Individually)

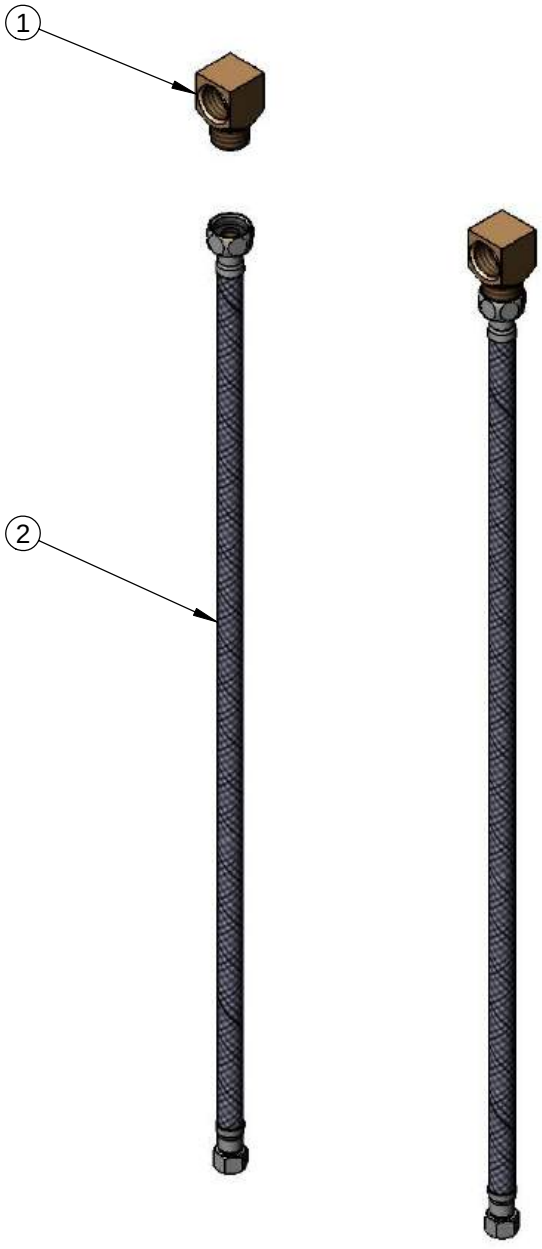

Product Specifications:

Inlet Kit:
1/2 NPT Close Elbows and 24" Flexible Supply Hoses

Drawn	Checked	Approved
GEF	JRM	JHB
Scale: 1:4		Date: 10/14/08

Sheet: 2 of 2

CMA
RESTAURANT SUPPLY & DESIGN, INC.

Submittal Sheet

04/21/2026

ITEM# 35 - MOBILE GARBAGE CAN (1 EA REQ'D)

OWNER

To be supplied and installed by the owner.

Owner Supplied 1 Item #35

Description: Mobile Garbage Can

Notes: To be supplied and installed by the owner.

CMA
RESTAURANT SUPPLY & DESIGN, INC.

Submittal Sheet

04/21/2026

ITEM# 36 - FLOOR TROUGH (1 EA REQ'D)

Pacific Stainless FT8412-SG

Floor Trough, 84"W x 12"D, removable stainless steel subway-style grating, 4" deep trough pan with built-in pitch toward drain, 3" I.P.S. x 3" drain tail piece (no hub connection), 14/304 stainless steel construction, NSF, Made in USA

The spec sheet for this item can be viewed on item 1)

ACCESSORIES

Mfr	Qty	Model	Spec
Pacific Stainless	1	FTBD	Optional Box Drain, Made in USA

CMA
RESTAURANT SUPPLY & DESIGN, INC.

Submittal Sheet

04/21/2026

ITEM# 37 - HAND SINK (1 EA REQ'D)

John Boos PBHS-W-1410-SSLR-X

Pro-Bowl Hand Sink, wall mount, 14"W x 10" front-to-back x 5" deep bowl, splash mount faucet holes with 4" centers, 1-7/8" drain opening with basket drain, with left & right side splashes, includes mounting bracket, all stainless steel construction, NSF, (faucet NOT included)

ACCESSORIES

Mfr	Qty	Model	Spec
John Boos	1		Standard flyer accessories only, NO modifications to flyer items allowed or their accessories

John BOOS® SINCE 1887

SPEC SHEET

"PBHS-14-SS" PRO-BOWL HAND SINKS

Wall Mount, (1) 14"x10"x5" Deep Bowl w/Side Splashes

FEATURES:

- One Piece Deep Drawn Bowl
- All Sink Bowls Have Large Liberal Radii Corners
- Includes Basket Drain
- Splash Mount Faucet Holes 4" On-Center

SPECIFICATIONS:

- Bowl: Stainless Steel Tops Are TIG Welded, Exposed Welds Are Polished To Match Adjacent Surface
- Bowl: Type 300 Stainless Steel Polish, Satin Finish
- Bracket: Type 300 Stainless Steel Polish, Satin Finish
- Drain: 2" Drain Opening, With 1-1/2" NPS Outlet Connection

CERTIFICATIONS:



PBHS-W-1410-P-SSLR



PBHS-W-1410-SSLR



PBHS-W-1410-SSR

ACCESSORIES

MODEL
Faucets
ADA Wrist Blades
Towel Dispenser
Lever Wastes
Over Flows
P-Traps

"PBHS-14-SS" PRO-BOWL HAND SINKS

MODEL	BOWL SIZE (L X W X H)	OVERALL SINK SIZE (L X W X H)	SIDE SPLASH	FAUCET	WEIGHT (LBS)
PBHS-W-1410-SSLR	14"x10"x5"	17"x15-1/2"x13-1/8"	LH & RH	N/A	9
PBHS-W-1410-P-SSLR	14"x10"x5"	17"x15-1/2"x13-1/8"	LH & RH	PBF-4-S-LF	13
PBHS-W-1410-SSL	14"x10"x5"	17"x15-1/2"x13-1/8"	LH Only	N/A	9
PBHS-W-1410-SSR	14"x10"x5"	17"x15-1/2"x13-1/8"	RH Only	N/A	9

ALL DIMENSIONS ARE TYPICAL. TOLERANCE +/- .500". JOHN BOOS & CO. RESERVES THE RIGHT TO CHANGE SPECIFICATIONS WITHOUT NOTICE.

DETAILED SPECIFICATIONS

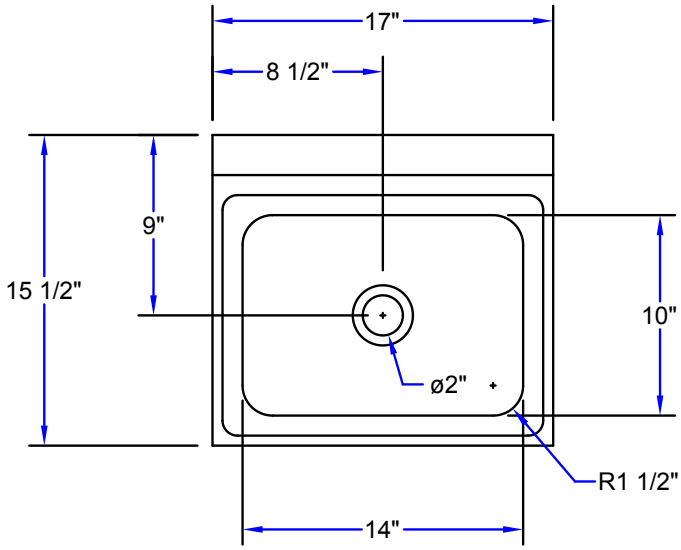

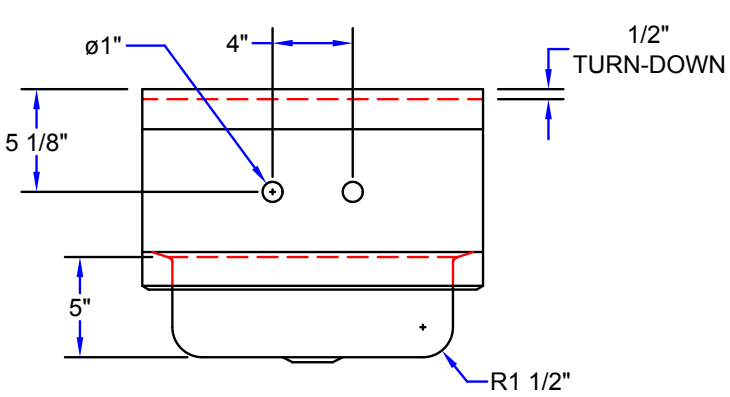

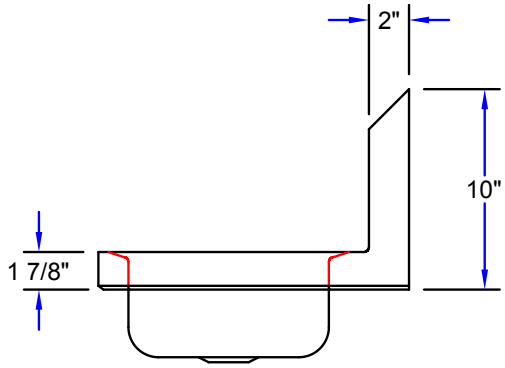

"PBHS-14-SS" PRO-BOWL HAND SINKS

MODEL	BOWL SIZE (L X W X H)	OVERALL SINK SIZE (L X W X H)	SIDE SPLASH	FAUCET	WEIGHT (LBS)
PBHS-W-1410-SSLR	14"x10"x5"	17"x15-1/2"x13-1/8"	LH & RH	N/A	9
PBHS-W-1410-P-SSLR	14"x10"x5"	17"x15-1/2"x13-1/8"	LH & RH	PBF-4-S-LF	13
PBHS-W-1410-SSL	14"x10"x5"	17"x15-1/2"x13-1/8"	LH Only	N/A	9
PBHS-W-1410-SSR	14"x10"x5"	17"x15-1/2"x13-1/8"	RH Only	N/A	9

ALL DIMENSIONS ARE TYPICAL. TOLERANCE +/- .500". JOHN BOOS & CO. RESERVES THE RIGHT TO CHANGE SPECIFICATIONS WITHOUT NOTICE.

CMA
RESTAURANT SUPPLY & DESIGN, INC.

Submittal Sheet

04/21/2026

ITEM# 38 - WALL / SPLASH MOUNT FAUCET (1 EA REQ'D)

T&S Brass B-1146

Workboard Faucet, wall mount, 4" centers, 5-3/4" swivel gooseneck nozzle (includes lock washer to convert to rigid), 2.2 GPM aerator, quarter-turn Eterna cartridges with spring checks, lever handles with color coded indexes, 1/2" NPT male inlets, ADA Compliant

ACCESSORIES

Mfr	Qty	Model	Spec
T&S Brass	1	B-1105-KIT	Inlet Kit, 1/2"NPT close elbows, 24" flex supply hoses

T&S BRASS AND BRONZE WORKS, INC.
2 Saddleback Cove / P.O. Box 1088
Travelers Rest, SC 29690

Travelers Rest, SC: 800-476-4103 • Simi Valley, CA: 800-423-0150 • Fax: 864-834-3518 • www.tsbrass.com

Model No.
B-1146

Item No.

ADA Compliant

This Space for Architect/Engineer Approval

Job Name_____Date_____

Model Specified_____ Quantity_____

Customer/Wholesaler_____

Contractor_____

Architect/Engineer_____

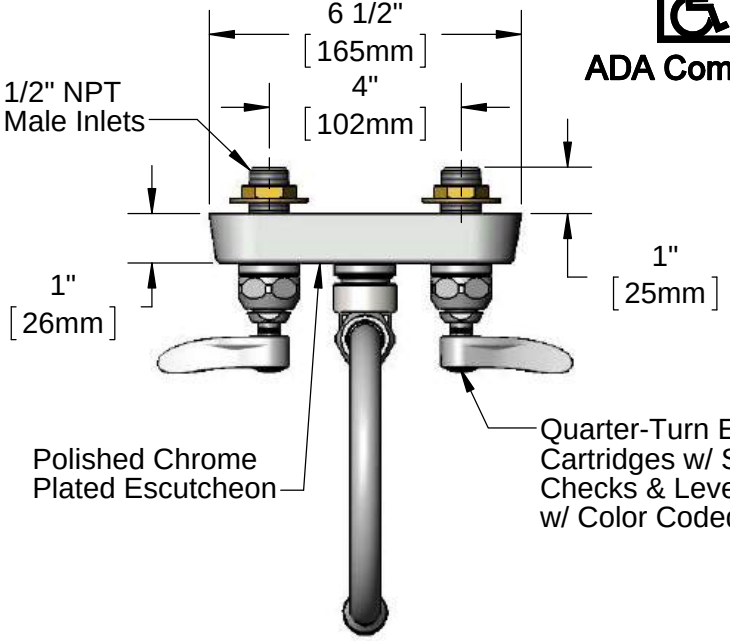

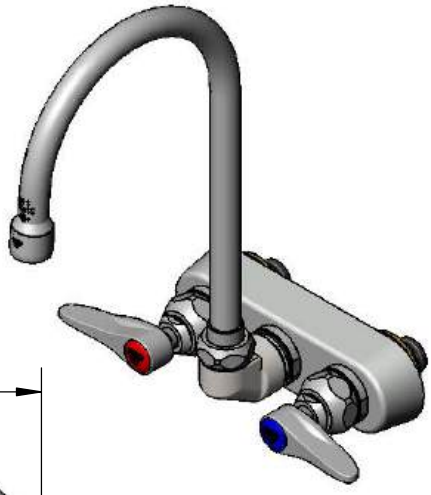

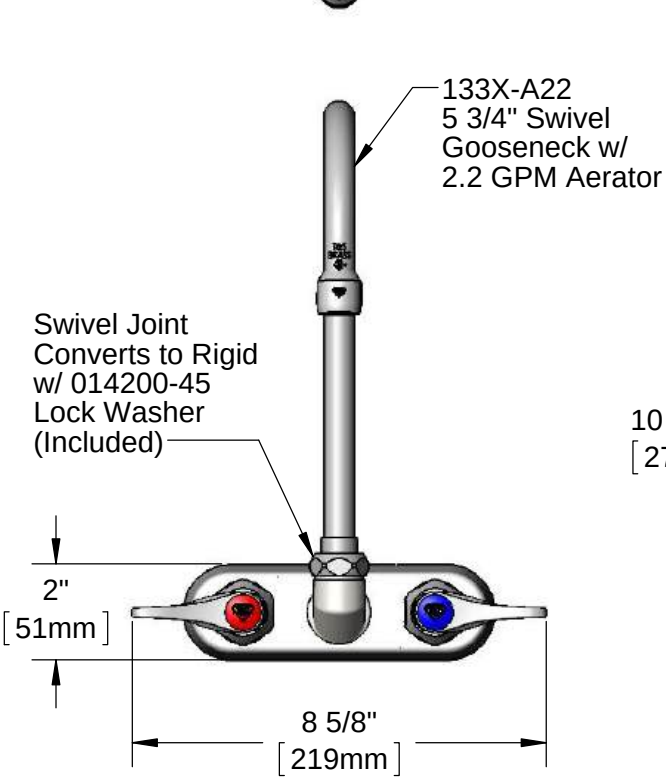

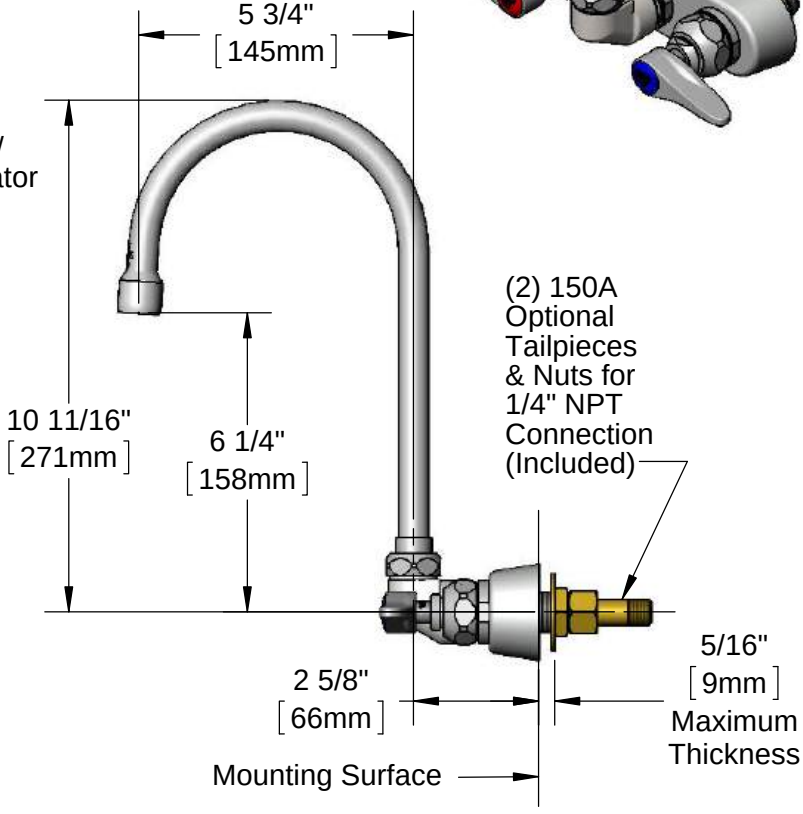

Rough-In Requirement:
(2) ∅1" [25mm] Mounting Holes

Product Specifications:
4" Wall Mount Workboard Faucet, Quarter-Turn Eterna Cartridges w/ Spring Checks, Lever Handles, 5 3/4" Swivel Gooseneck, 2.2 GPM Aerator & 1/2" NPT Male Inlets

Product Compliance:
ASME A112.18.1 / CSA B125.1
NSF 61 - Section 9
NSF 372 (Low Lead Content)
ANSI A117.1 (ADA)

Drawn: DMH	Checked: JRM	Approved: JHB	Date: 06/01/16	Scale: 1:4	Sheet: 1 of 2

T&S BRASS AND BRONZE WORKS, INC.
2 Saddleback Cove / P.O. Box 1088
Travelers Rest, SC 29690

Travelers Rest, SC: 800-476-4103 • Simi Valley, CA: 800-423-0150 • Fax: 864-834-3518 • www.tsbrass.com

Model No. **B-1146**

Item No.

ITEM NO.	SALES NO.	DESCRIPTION
1	B-0199-01	2.2 GPM Aerator, 55/64"-27 UN Female
2	133X-A22	5 3/4" Swivel Gooseneck w/ 2.2 GPM Aerator
3	019360-40	Swivel Nut (New Style)
4	009538-45	Swivel Washer
5	011429-45	Swivel Sleeves (2)
6	001074-45	O-Ring
7	019382-40	Quarter-Turn New Style Eterna Cartridge w/ Spring Check, LTC
8	150A	1/4" NPT Tailpiece & Nut
9	002954-45	Shank Lock Nut
10	000999-45	Brass Lock Washer
11	019374-40	B-1110 Eterna Workboard Escutcheon
12	019376-40	Escutcheon Lock Nut
13	019383-40	Quarter-Turn New Style Eterna Cartridge w/ Spring Check, RTC
14	019361-45	Lever Handle (New Style)
15	000925-45	Lab Handle Screw
16	019363-45	Blue Button Index, Press-in
17	001017-45	Washer
18	000082-40	B-1100 Knob
19	014200-45	Star Washer, Anti-Rotation
20	019364-45	Red Button Index, Press-in

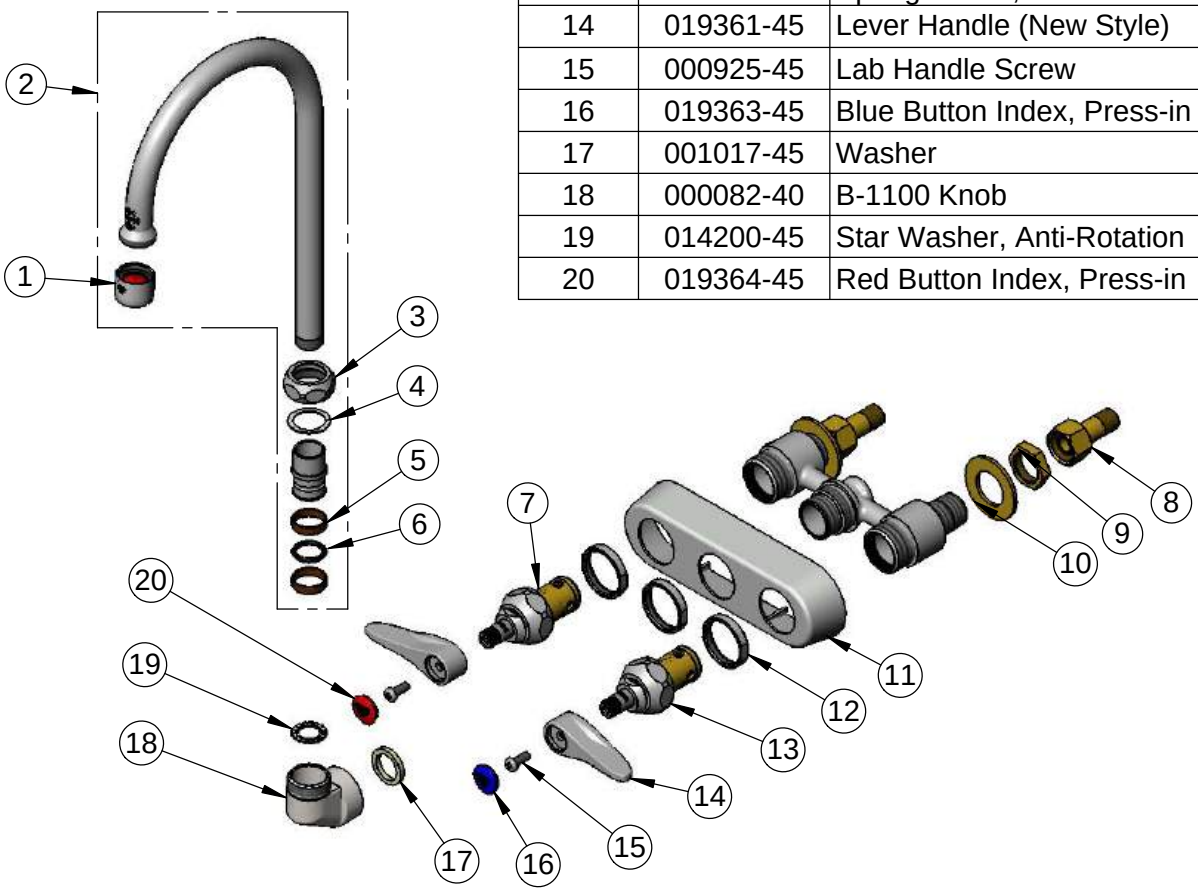

Product Specifications:
4" Wall Mount Workboard Faucet, Quarter-Turn Eterna Cartridges w/ Spring Checks, Lever Handles, 5 3/4" Swivel Gooseneck, 2.2 GPM Aerator & 1/2" NPT Male Inlets

Product Compliance:
ASME A112.18.1 / CSA B125.1
NSF 61 - Section 9
NSF 372 (Low Lead Content)
ANSI A117.1 (ADA)

Drawn:	Checked:	Approved:	Date:	Scale:	Sheet:
DMH	JRM	JHB	06/01/16	NTS	2 of 2

CMA
RESTAURANT SUPPLY & DESIGN, INC.

Submittal Sheet

04/21/2026

ITEM# 39 - HAND TOWEL AND SOAP DISPENSER (1 EA REQ'D)

OWNER

Not in CMA contract. To be supplied and installed by the owner.

Owner Supplied 1 Item #39

Description: Hand towel and soap dispenser

Notes: Not in CMA contract. To be supplied and installed by the owner.

CMA
RESTAURANT SUPPLY & DESIGN, INC.

Submittal Sheet

04/21/2026

ITEM# 40 - CUSTOM (1 EA REQ'D)

Pacific Stainless

Custom Stainless steel fish prep sink with drainboard.
18" x 24" x 14" sink with lever waste
perforated insert with poly cutting board on front to match up flush
Marine edges
2 sets of splash mount faucet holes
10" backsplash

Description: Custom

Notes: Custom Stainless steel fish prep sink with drainboard.
18" x 24" x 14" sink with lever waste
perforated insert with poly cutting board on front to match up flush
Marine edges
2 sets of splash mount faucet holes
10" backsplash

CMA RESTAURANT SUPPLY & DESIGN, INC.

Submittal Sheet

04/21/2026

ITEM# 41 - PRE-RINSE FAUCET ASSEMBLY, WITH ADD ON FAUCET (1 EA REQ'D)

T&S Brass B-0133-01

EasyInstall Pre-Rinse Unit, mixing faucet, 8" wall mount, 14" add-on 063X swing nozzle, 18" riser, overhead spring, lever handles, 56" flex hose, Eterna cartridges, spray valve (B-0107), 9" wall support (B-0109-02), 1/2" male NPT, EPAct2005 Compliant

The spec sheet for this item can be viewed on item 34)

ACCESSORIES

Mfr	Qty	Model	Spec
T&S Brass	1	B-1105-KIT	Inlet Kit, 1/2"NPT close elbows, 24" flex supply hoses

CMA RESTAURANT SUPPLY & DESIGN, INC.

Submittal Sheet

04/21/2026

ITEM# 42 - WALL / SPLASH MOUNT FAUCET (1 EA REQ'D)

T&S Brass B-0231

Sink Mixing Faucet, wall mount, 8" centers, 12" swing nozzle, lever handles, quarter-turn Eterna cartridges, 1/2" NPT female inlets, low lead, ADA Compliant

ACCESSORIES

Mfr	Qty	Model	Spec
T&S Brass	1	B-0230-KIT	Inlet Kit, 1/2" NPT nipple, close elbows, 24" flex supply hoses

T&S BRASS AND BRONZE WORKS, INC.
2 Saddleback Cove / P.O. Box 1088
Travelers Rest, SC 29690

Travelers Rest, SC: 800-476-4103 • Simi Valley, CA: 800-423-0150 • Fax: 864-834-3518 • www.tsbrass.com

Model No. **B-0231**

Item No.

ADA Compliant

This Space for Architect/Engineer Approval

Job Name_____Date_____

Model Specified_____ Quantity_____

Customer/Wholesaler_____

Contractor_____

Architect/Engineer_____

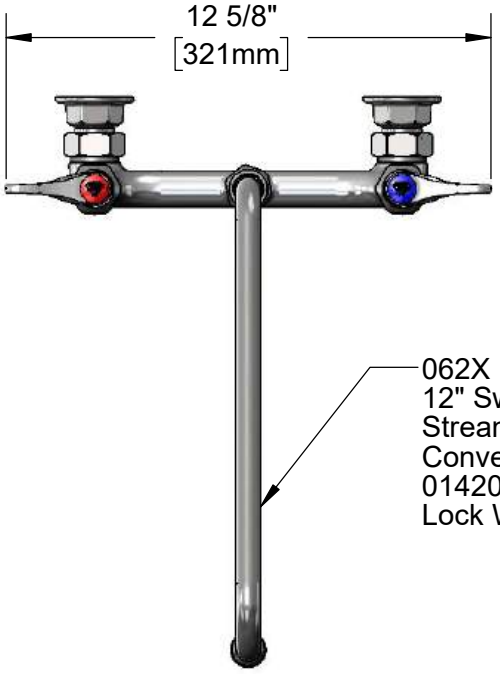



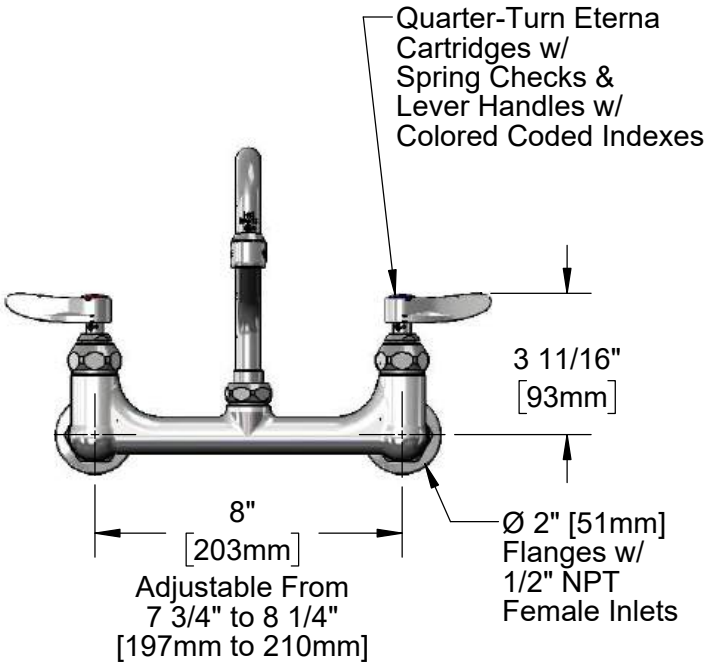

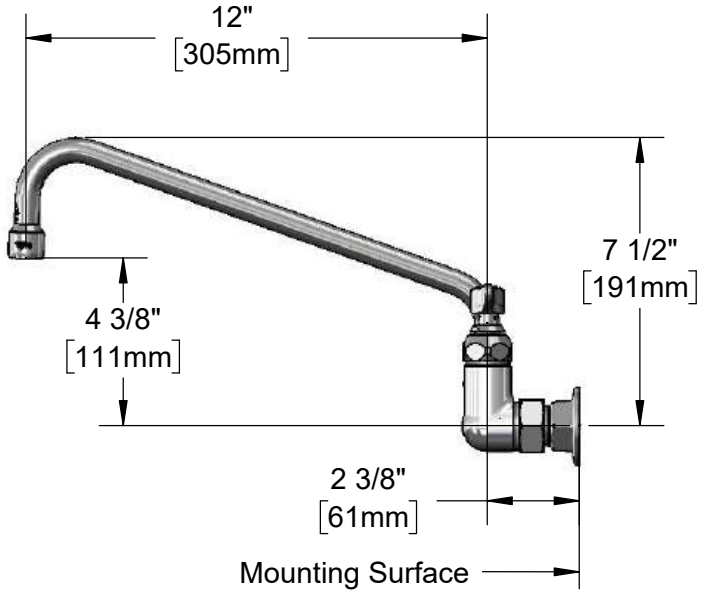

Product Specifications:
8" Wall Mount Mixing Faucet w/ Quarter-Turn Eterna Cartridges w/ Spring Checks, Lever Handles, 12" Swing Nozzle & 1/2" NPT Female Inlets

Product Compliance:
ASME A112.18.1 / CSA B125.1
NSF 61 - Section 9
NSF 372 (Low Lead Content)
ANSI A117.1 (ADA)

Drawn: MRC	Checked: JRM	Approved: JHB	Date: 01/22/18	Scale: 1:5	Sheet: 1 of 2

T&S BRASS AND BRONZE WORKS, INC.
2 Saddleback Cove / P.O. Box 1088
Travelers Rest, SC 29690

Travelers Rest, SC: 800-476-4103 • Simi Valley, CA: 800-423-0150 • Fax: 864-834-3518 • www.tsbrass.com

Model No.
B-0231

Item No.

ITEM NO.	SALES NO.	DESCRIPTION
1	B-PT	Full Flow Stream Regulator, 55/64-27
2	062X	12" Swing Nozzle
3	009538-45	Swivel Washer
4	011429-45	Swivel Sleeves (2)
5	001074-45	O-Ring
6	014200-45	Star Washer, Anti-Rotation
7	002711-40NS	Quarter-Turn Eterna Cartridge w/ Spring Check, Handle, Blue Index & Screw, LTC
8	001019-45	Coupling Nut Washer
9	00AA	1/2" NPT Female Eccentric Flange
10	012442-40NS	Quarter-Turn Eterna Cartridge w/ Spring Check, LTC
11	001638-45NS	Lever Handle (New Style)
12	000925-45	Lab Handle Screw
13	018506-19NS	Blue Button Index, Press-in
14	002712-40NS	Quarter-Turn Eterna Cartridge w/ Spring Check, Handle, Red Index & Screw, RTC
15	012443-40NS	Quarter-Turn Eterna Cartridge w/ Spring Check, RTC
16	001193-19NS	Red Button Index, Press-in

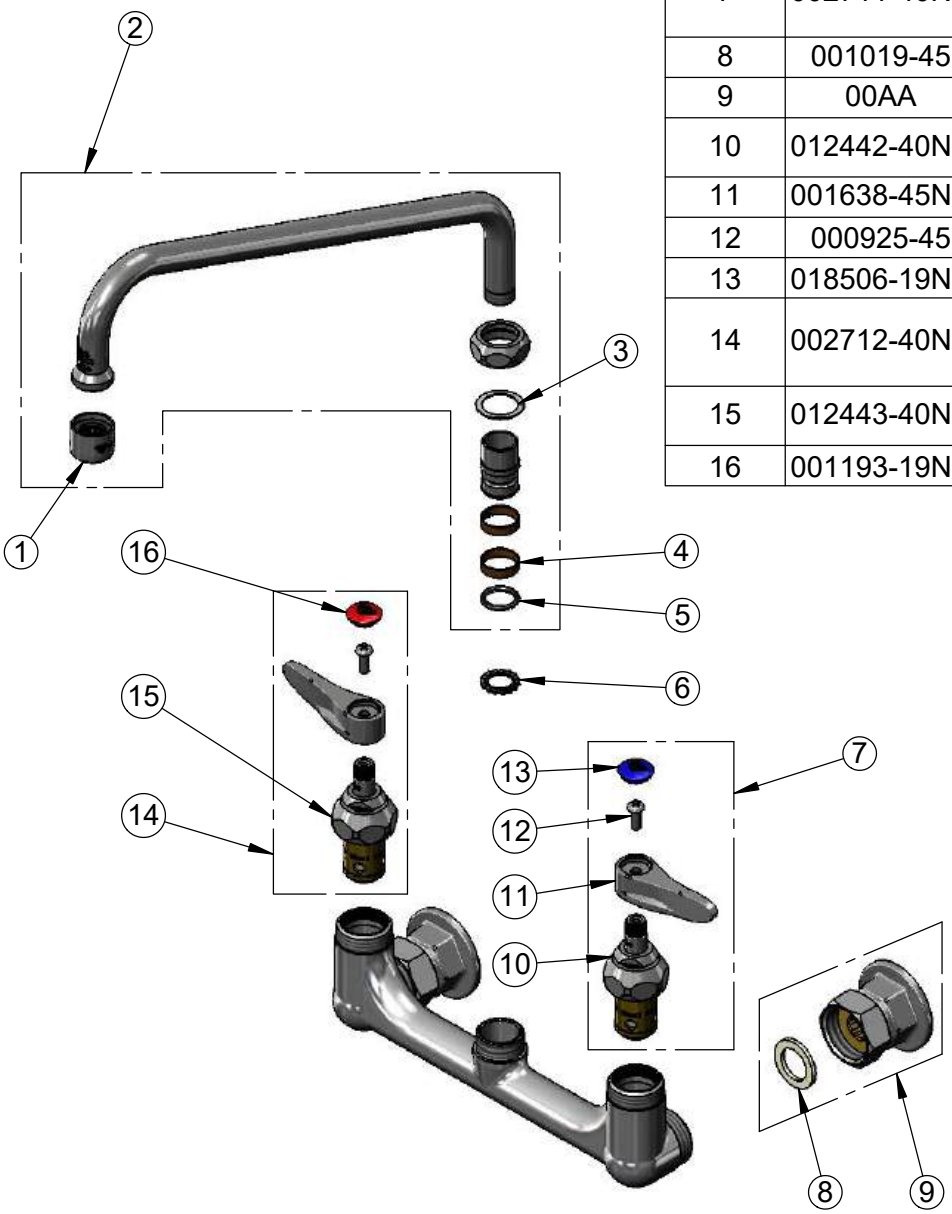

Product Specifications:
8" Wall Mount Mixing Faucet w/ Quarter-Turn Eterna Cartridges w/ Spring Checks, Lever Handles, 12" Swing Nozzle & 1/2" NPT Female Inlets

Product Compliance:
ASME A112.18.1 / CSA B125.1
NSF 61 - Section 9
NSF 372 (Low Lead Content)
ANSI A117.1 (ADA)

Drawn:	MRC	Checked:	JRM	Approved:	JHB	Date:	01/22/18	Scale:	NTS	Sheet:	2 of 2

T&S BRASS AND BRONZE WORKS, INC.
2 Saddleback Cove / P.O. Box 1088
Travelers Rest, SC 29690

Travelers Rest, SC: 800-476-4103 • Simi Valley, CA: 800-423-0150 • Fax: 864-834-3518 • www.tsbrass.com

Model No.
B-0230-KIT

Item No.

This Space for Architect/Engineer Approval

Job Name_____Date_____

Model Specified_____ Quantity_____

Customer/Wholesaler_____

Contractor_____

Architect/Engineer_____

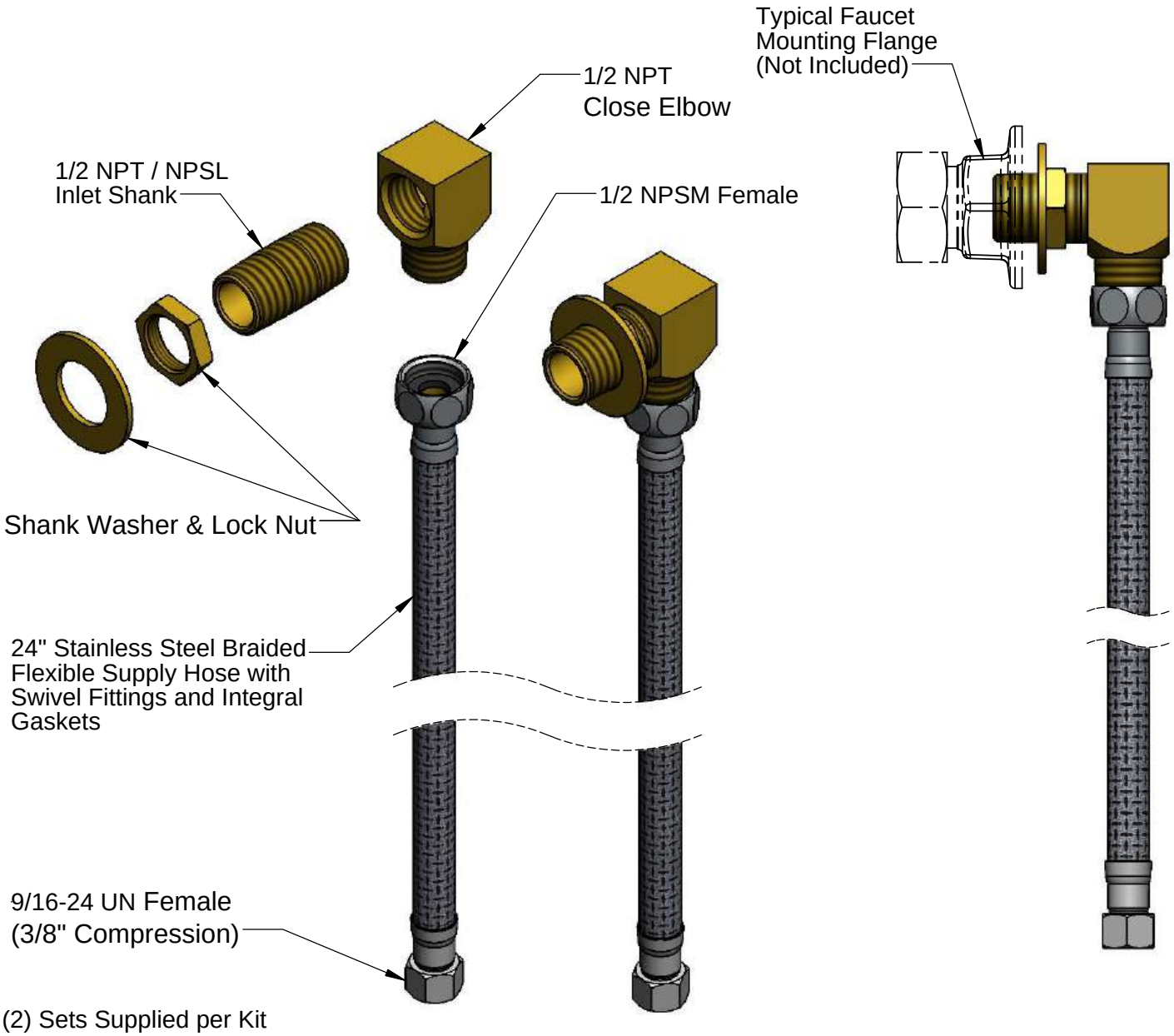

(2) Sets Supplied per Kit

Product Specifications:
Inlet Kit:
1/2" Inlet Shanks, Close Elbows
and 24" Flexible Supply Hoses

Product Compliance:

ASME A112.18.1 / CSA B125.1
NSF 61 - Section 9
NSF 372 (Low Lead Content)

Drawn: JBC	Checked: JRM	Approved: JHB	Date: 02/23/16	Scale: 1:4	Sheet: 1 of 2

T&S BRASS AND BRONZE WORKS, INC.
2 Saddleback Cove / P.O. Box 1088
Travelers Rest, SC 29690

Travelers Rest, SC: 800-476-4103 • Simi Valley, CA: 800-423-0150 • Fax: 864-834-3518 • www.tsbrass.com

Model No.
B-0230-KIT

Item No.

ITEM NO.	SALES NO.	DESCRIPTION
1	B-0230-K	1/2" Inlet Assembly Kit (2 Sets per Kit)
2	017420-45	24" Flexible Supply Hose (Sold Individually)

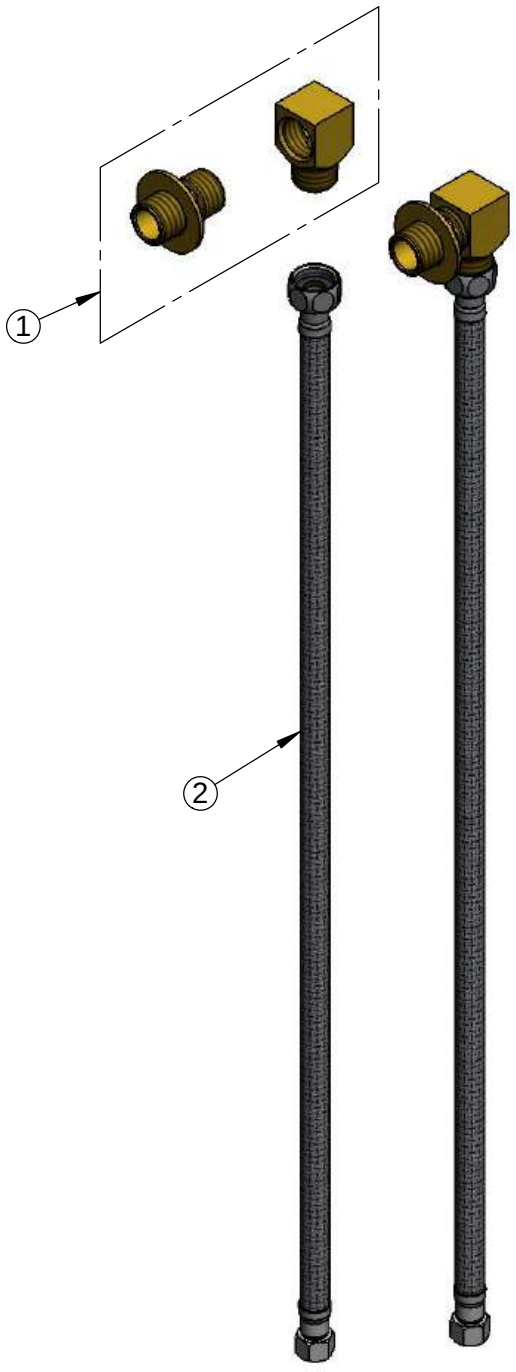

Product Specifications:
Inlet Kit:
1/2" Inlet Shanks, Close Elbows
and 24" Flexible Supply Hoses

Product Compliance:

ASME A112.18.1 / CSA B125.1
NSF 61 - Section 9
NSF 372 (Low Lead Content)

Drawn: JBC	Checked: JRM	Approved: JHB	Date: 02/23/16	Scale: NTS	Sheet: 2 of 2

CMA
RESTAURANT SUPPLY & DESIGN, INC.

Submittal Sheet

04/21/2026

ITEM# 43 - WORK TABLE, STAINLESS STEEL TOP (1 EA REQ'D)

Pacific Stainless CUSTOM

Spec Line Work Table, 90" x 30"D, Series A, 14/304 stainless top with backsplash, 1" x 6", 14 gauge U-Channels, 16/304 stainless undershelf welded to (6) each 1-5/8" stainless tube legs with stainless adjustable feet, fully assembled, sound deadened, NSF, Made in USA

"Spec Line" Stainless Steel Work Tables - "A6" Series - 6 Legs
Part # - WKS####A6S

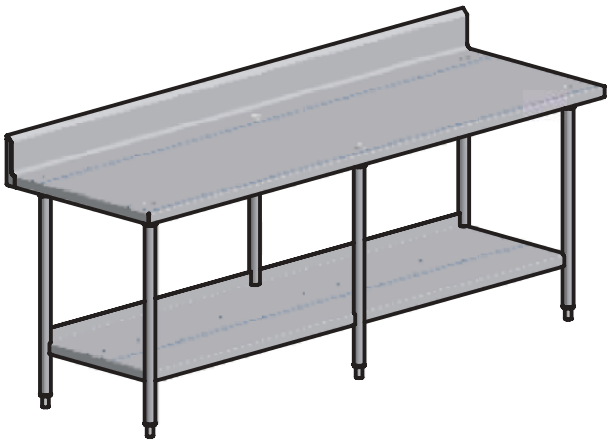

Item#: _____ Qty: ____

Model#: _____

NSF

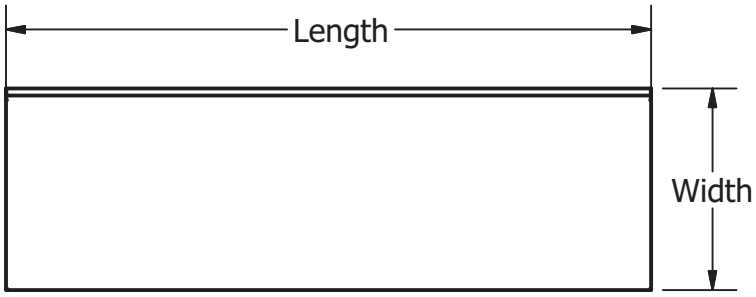

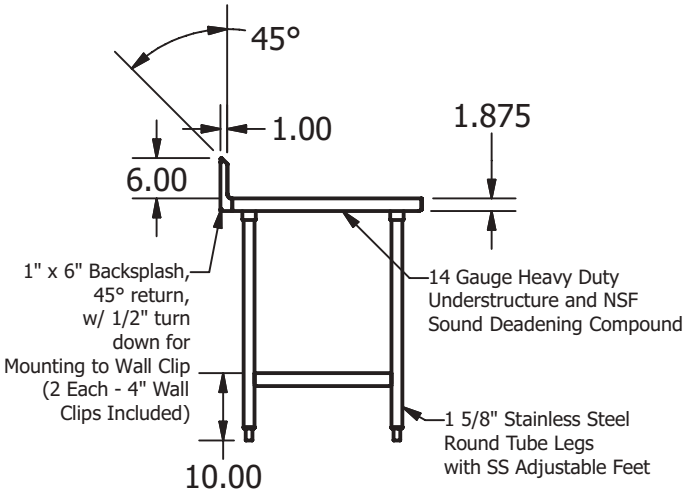

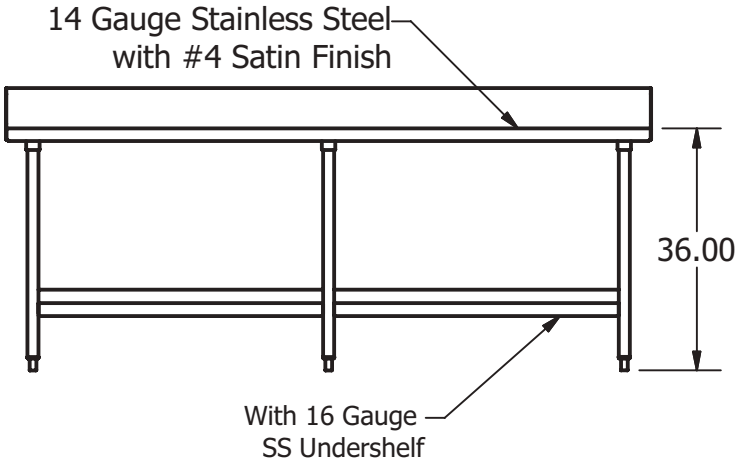

Features:

* "Spec Line" table tops are constructed of 14 Gauge Type 304 Stainless Steel with #4 Satin Finish
* Tables have a 14 gauge heavy duty understructure
* Tables are undercoated with a NSF Sound Deadening Compound
* With 16 gauge stainless steel lower shelf
* 1 5/8" Stainless steel round tube legs with SS adjustable feet
* Table working heights are 36"

Options:	Model Number	U/M
Adjustable Stainless Steel Flange Feet	CHGA10-0854	each
Casters, (without brake)	CHGC23-1450	each
Casters, (with brake)	CHGC23-1451	each
15" x 20" "Spec Line" Drawer w/ Plastic Pan - NSF	SDA152006P	each
15" x 20" "Spec Line" Drawer w/ SS Pan - NSF	SDA152006S	each
20" x 20" "Spec Line" Drawer w/ Plastic Pan - NSF	SDA202006P	each
20" x 20" "Spec Line" Drawer w/ SS Pan - NSF	SDA202006S	each
Drawer Lock, "Spec Line" Only - Price is Installed	DL001	each
Lower Table Height (State table work surface height)	LTH001	Lot

Orders Phone 888-618-2122 Fax 503-397-9596 www.pacificstainless.com

Pacific Stainless PRODUCTS, INC.

"Spec Line" Stainless Steel Work Tables

"A6" Series - Table Lengths (15" to 138")



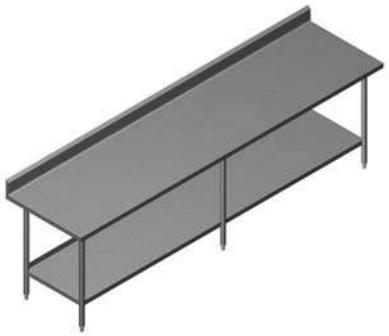

Four Leg "A6" Series Tables with Undershelf

Length	24" Wide Model	30" Wide Model	33" Wide Model	36" Wide Model
15"	WKS 1524A6S	WKS 1530A6S	WKS 1533 A6S	WKS 1536A6S
18"	WKS 1824A6S	WKS 1830A6S	WKS 1833 A6S	WKS 1836A6S
21"	WKS 2124A6S	WKS 2130A6S	WKS 2133 A6S	WKS 2136A6S
24"	WKS 2424A6S	WKS 2430A6S	WKS 2433 A6S	WKS 2436A6S
27"	WKS 2724A6S	WKS 2730A6S	WKS 2733 A6S	WKS 2736A6S
30"	WKS 3024A6S	WKS 3030A6S	WKS 3033 A6S	WKS 3036A6S
33"	WKS 3324A6S	WKS 3330A6S	WKS 3333 A6S	WKS 3336A6S
36"	WKS 3624A6S	WKS 3630A6S	WKS 3633 A6S	WKS 3636A6S
42"	WKS 4224A6S	WKS 4230A6S	WKS 4233 A6S	WKS 4236A6S
48"	WKS 4824A6S	WKS 4830A6S	WKS 4833 A6S	WKS 4836A6S
54"	WKS 5424A6S	WKS 5430A6S	WKS 5433 A6S	WKS 5436A6S
60"	WKS 6024A6S	WKS 6030A6S	WKS 6033 A6S	WKS 6036A6S
66"	WKS 6624A6S	WKS 6630A6S	WKS 6633 A6S	WKS 6636A6S
72"	WKS 7224A6S	WKS 7230A6S	WKS 7233 A6S	WKS 7236A6S

Six Leg "A6" Series Tables with Undershelf

Length	24" Wide Model	30" Wide Model	33" Wide Model	36" Wide Model
72"	WKS 67224A6S	WKS 67230A6S	WKS 67233A6S	WKS 67236A6S
78"	WKS 7824A6S	WKS 7830A6S	WKS 7833A6S	WKS 7836A6S
84"	WKS 8424A6S	WKS 8430A6S	WKS 8433A6S	WKS 8436A6S
90"	WKS 9024A6S	WKS 9030A6S	WKS 9033A6S	WKS 9036A6S
96"	WKS 9624A6S	WKS 9630A6S	WKS 9633A6S	WKS 9636A6S
102"	WKS 10224A6S	WKS 10230A6S	WKS 10233A6S	WKS 10236A6S
108"	WKS 10824A6S	WKS 10830A6S	WKS 10833A6S	WKS 10836A6S
114"	WKS 11424A6S	WKS 11430A6S	WKS 11433A6S	WKS 11436A6S
120"	WKS 12024A6S	WKS 12030A6S	WKS 12033A6S	WKS 12036A6S
126"	WKS 12624A6S	WKS 12630A6S	WKS 12633A6S	WKS 12636A6S
132"	WKS 13224A6S	WKS 13230A6S	WKS 13233A6S	WKS 13236A6S
138"	WKS 13824A6S	WKS 13830A6S	WKS 13833A6S	WKS 13836A6S

"Custom Configurations Available"

Phone 888.618.2122 Fax 503.397.9596 E-mail info@pacificstainless.com

CMA RESTAURANT SUPPLY & DESIGN, INC.

Submittal Sheet

04/21/2026

ITEM# 44 - WALL MOUNT SHELF UNIT (1 EA REQ'D)

Quantum XXX

Wire wall shelving, three levels high, (1) 18" deep and (2) 14" deep. To include the following components

ACCESSORIES

Mfr	Qty	Model	Spec
Quantum	4	SG-U44GY	44in UPRIGHT GRAY EPOXY
Quantum	4	SG-CS14GY	Store Grid Shelf Support Bracket, single, for use with 14"W shelves, grey epoxy antimicrobial finish, NSF
Quantum	2	SG-CS18GY	Store Grid Shelf Support Bracket, single, for use with 18"W shelves, grey epoxy antimicrobial finish, NSF
Quantum	4	SG-CD14GY	Store Grid Shelf Support Bracket, double, for use with 14"W shelves, grey epoxy antimicrobial finish, NSF
Quantum	2	SG-CD18GY	Store Grid Shelf Support Bracket, double, for use with 18"W shelves, grey epoxy antimicrobial finish, NSF
Olympic	6	J1448G	Shelf, wire, 14" x 48", chromate with Olympic Gray-Guard™ epoxy finish, NSF
Olympic	3	J1848G	Shelf, wire, 18" x 48", chromate with Olympic Gray-Guard™ epoxy finish, NSF
Olympic	3		1 year warranty against manufacturing defects
Olympic	3		7 year warranty against rust and corrosion
Olympic	6		1 year warranty against manufacturing defects
Olympic	6		7 year warranty against rust and corrosion

QUANTUM FOODSERVICE

STORE GRID MOUNTED SYSTEM

DESIGN: A versatile storage, utility and display system suited to maximize efficiencies of underutilized spaces and empty walls. Store Grid has a sophisticated system that integrates wall tracks, grids, wall shelving and accessories in limitless custom configurations. Ideal to use around and above sinks, prep-stations, work tables, staging areas and equipment in order to keep these areas cleaner and more organized.



CONSTRUCTION: Cold rolled steel, gauge varies per item.

FINISH:

Green Epoxy: *is an ideal solution for dry, wet and damp applications. The carbon steel is treated with an iron phosphate and the powder coated epoxy is electrostatically applied, baked and cured to a hard surface. 15 year limited warranty for antimicrobial finish to not rust or corrode.*

QUICK, EASY ASSEMBLY: Attach wall tracks to a proper mounting structure *(wood studs, plywood, concrete, etc.)*. Hang uprights or grid brackets from wall track and secure them to the wall. Lastly, configure the task station or wall shelving to meet your needs.

ADJUSTABLE: Uprights are slotted every 1-1/2" allowing shelves and grids to adjust vertically. Grids have a 3" x 3" opening that enables accessories to adjust vertically or horizontally at any given time.



CLEANABLILITY: Shelves, shelves brackets, grids and accessories may be removed for in-depth cleaning of walls. Wall tracks and uprights can be wiped clean. Note: Do not use abrasive materials since these may damage the protective coating. Clean with mild detergents and damp cloths.

NSF APPROVED: Antimicrobial additive protects the epoxy from bacteria, mold and mildew, that causes stains, odors and product degradation.

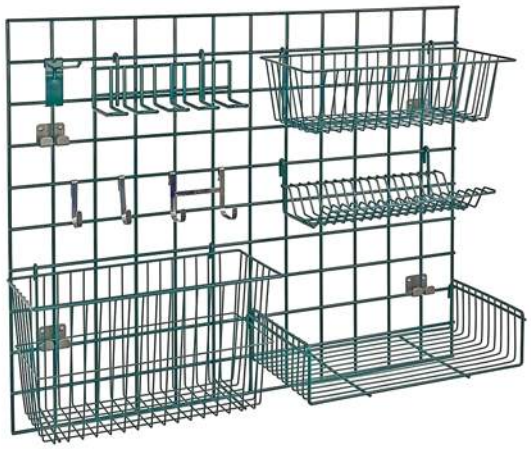

Product Notes:

- ❒ When configuring task stations with uprights, select shelves and grids of the same length. Longer grids may be used,although must not overhang the upright by more than 6" on either side.
- ❒ Grids may be mounted behind shelves. However, shelf support and grid cannot use the same slots on the upright.
- ❒ Maximum usable wall track mounting space is the track length minus 2" *(stop fasteners are installed at each end of a run of wall track and occupy around 1" of track space on each end)*

Highest Quality, Lowest Price Guaranteed!
QUANTUM FOOD SERVICE
15800 NW 15TH AVENUE, MIAMI, FLORIDA 33169 **TOLL-FREE:** (888) 993-3370 **FAX:** (954) 369-2512

QUANTUM FOODSERVICE

STORE GRID MOUNTED SYSTEM

WALL TRACKS

- Made of 12 gauge cold rolled steel
- Mounting holes located at 8" increments, first and last holes are located at 4" from the end of the tracks
- Wall tracks include stop fasteners for the end of the tracks and joiner plates for connecting adjacent tracks *(hardware to mount track to the wall not included).*



WALL TRACKS		
W" x L" x H"	SHIP WGT	MODEL NO.
¾ x 40 x 1½	5	SG-WT40P
¾ x 56 x 1½	6	SG-WT56P
¾ x 72 x 1½	7	SG-WT72P

GRID PANELS

- ¼" diameter cold rolled steel
- 3" x 3" openings
- Provides a surface for task management accessories
- Can mount directly to the uprights or mounting bracket kits

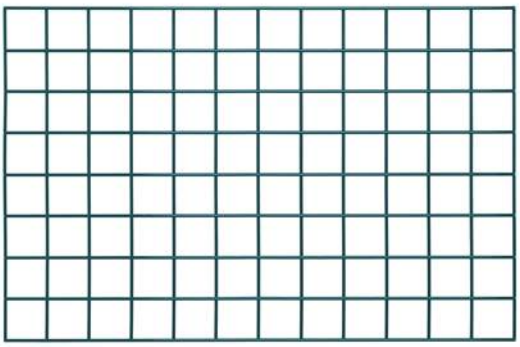

UPRIGHTS

- Made of 12 gauge cold rolled steel
- Slotted every 1½"
- Mounting holes are spaced every 6" along the upright.



Minimum of two uprights per system

UPRIGHTS		
W" x L" x H"	SHIP WGT	MODEL NO.
1¾ x 1 x 16	2	SG-U16P
1¾ x 1 x 31	4	SG-U31P
1¾ x 1 x 44½	5	SG-U44P

GRID PANELS		
W" x L" x H"	SHIP WGT	MODEL NO.
¼ x 30¼ x 18¼	8	SG-1830P
¼ x 36¼ x 18¼	9	SG-1836P
¼ x 48¼ x 18¼	12	SG-1848P
¼ x 60¼ x 18¼	14	SG-1860P
¼ x 36¼ x 24¼	12	SG-2436P
¼ x 48¼ x 24¼	15	SG-2448P
¼ x 36¼ x 30¼	13	SG-3036P
¼ x 48¼ x 30¼	17	SG-3048P
¼ x 54¼ x 33¼	21	SG-3354P

Highest Quality, Lowest Price Guaranteed!
QUANTUM FOOD SERVICE
15800 NW 15TH AVENUE, MIAMI, FLORIDA 33169 **TOLL-FREE:** (888) 993-3370 **FAX:** (954) 369-2512

QUANTUM FOODSERVICE

STORE GRID MOUNTED SYSTEM

CANTILEVER ARM

- Mounts directly into uprights
- Two single cantlevers are required for each end of a unit
- Double cantilevers available for side by side shelving units



Single Cantilever Arm



Double Cantilever Arm

CANTILEVER ARMS		
W" x L" x H"	SHIP WGT	MODEL NO.
SINGLE		
1⅜ x 16¼ x 8¼	3	SG-CS14P
1⅜ x 20¼ x 8¼	3	SG-CS18P
1⅜ x 23¼ x 8¼	4	SG-CS21P
1⅜ x 26¼ x 8¼	4	SG-CS24P
DOUBLE		
1⅜ x 16¼ x 8¼	3	SG-CD14P
1⅜ x 20¼ x 8¼	3	SG-CD18P
1⅜ x 23¼ x 8¼	4	SG-CD21P
1⅜ x 26¼ x 8¼	4	SG-CD24P

MOUNTING BRACKETS

- Brackets may be mounted directily to the wall or track
- One pack required per grid
- For use in Standard and Light-Duty applications

MOUNTING BRACKETS		
W" x L" x H"	SHIP WGT	MODEL NO.
1¼ x 6 x 1¾	2	SG-DWB
1¼ x 3¼ x 4	2	SG-WTBP
1¼ x 5¼ x 2¼	2	SG-PWM

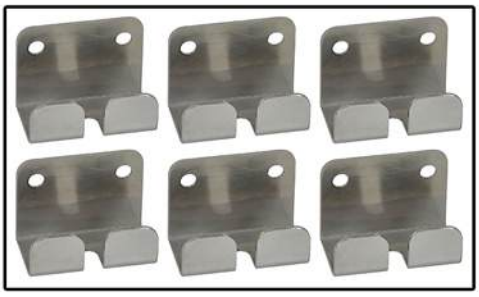

SG-DWB
Bracket pack connects grid directly to wall. Sold in pack of 6
Finish: Stainless Steel

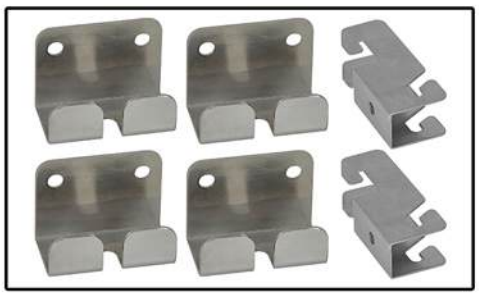

SG-WTBP
Bracket pack connects grid directly to wall track. Sold in pack of 6
Finish: Stainless Steel



SG-DWB
Bracket pack connects grid directly to wall. Sold in pack of 6
Finish: Black Plastic

Highest Quality, Lowest Price Guaranteed!

QUANTUM FOOD SERVICE
15800 NW 15TH AVENUE, MIAMI, FLORIDA 33169 **TOLL-FREE:** (888) 993-3370 **FAX:** (954) 369-2512

QUANTUM FOODSERVICE

STORE GRID MOUNTED SYSTEM

ACCESSORIES

- Mounts to grid panel
- Easy to rearrange verticaly or horizontally
- A la carte or pre-made kits available


SG-LS1836P

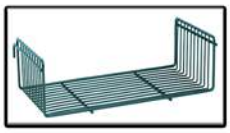
SG-S918P

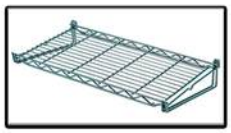
SG-S1224P

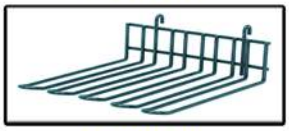
SG-UH10P

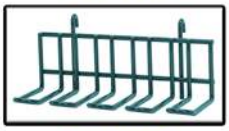
SG-UH4P


SG-S1616P


SG-B1357P


SG-B1775P

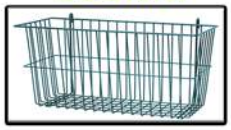
SG-B17710P


SG-HOOK6P


SG-HOOKSM


SG-HOOKLG


SG-HOOKDB

SHELVES		
W" x L" x H"	SHIP WGT	MODEL NO.
LARGE		
15¼ x 35 x 7½	12	SG-LS1436P
15¼ x 47 x 7½	16	SG-LS1448P
19¼ x 29 x 7½	15	SG-LS1830P
19¼ x 35 x 7½	18	SG-LS1836P
19¼ x 47 x 7½	24	SG-LS1848P
SMALL		
9¼ x 17¾ x 4¼	4	SG-S918P
12¼ x 23¼ x 3¾	7	SG-S1224P
16½ x 16½ x 3¾	6	SG-S1616P

BASKETS		
W" x L" x H"	SHIP WGT	MODEL NO.
5¼ x 13¼ x 7½	9	SG-B1357P
7¾ x 17½ x 5½	7	SG-B1775P
7¾ x 17½ x 10½	11	SG-B17710P

HOOKS		
W" x L" x H"	SHIP WGT	MODEL NO.
1½ x ¼ x 3¾	1	SG-HOOKSM
2½ x ¼ x 3¾	1	SG-HOOKLG
2½ x 4¼ x 3¾	1	SG-HOOKDB
1½ x 7¼ x 3¾	1	SG-HOOK6P

UTENSIL HOLDERS		
W" x L" x H"	SHIP WGT	MODEL NO.
11 x 10½ x 4¼	4	SG-UH10P
5 x 10½ x 4¼	4	SG-UH4P
4¼ x 4¼ x 5½	1	SG-CH
6 x 2½ x 5½	1	SG-CMBP

DRYING RACKS		
W" x L" x H"	SHIP WGT	MODEL NO.
14½ x 34½ x 11¼	12	SG-TDR461410P
14½ x 21¼ x 10½	5	SG-SLH201412P
8½ x 13½ x 4¼	2	SG-LH1384P
5¼ x 11 x 14¾	2	SG-BR6P

ASSORTED ACCESSORIES		
W" x L" x H"	SHIP WGT	MODEL NO.
5¾ x 22½ x 4¼	4	SG-1830P
7½ x 12¼ x 4	2	SG-1836P
6¾ x 12½ x 4	3	SG-1848P
4½ x 6¼ x 10½	2	SG-1860P
4½ x 10¼ x 8½	3	SG-2436P

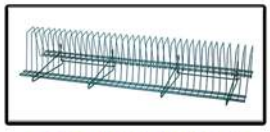
SG-TDR461410P


SG-SLH201412P

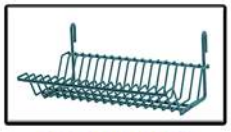
SG-LH1384P

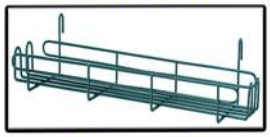
SG-SR2254P

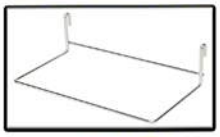
SG-HFF

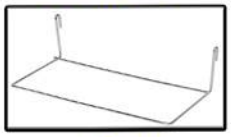
SG-IPH


SG-CMBP


SG-CH


SG-GBHP


SG-BR6P


SG-BH29P

Highest Quality, Lowest Price Guaranteed!

QUANTUM FOOD SERVICE
15800 NW 15TH AVENUE, MIAMI, FLORIDA 33169 **TOLL-FREE:** (888) 993-3370 **FAX:** (954) 369-2512

QUANTUM FOODSERVICE

STORE GRID MOUNTED SYSTEM

KITS/UNITS



SG-A1
Accessory Pack #1

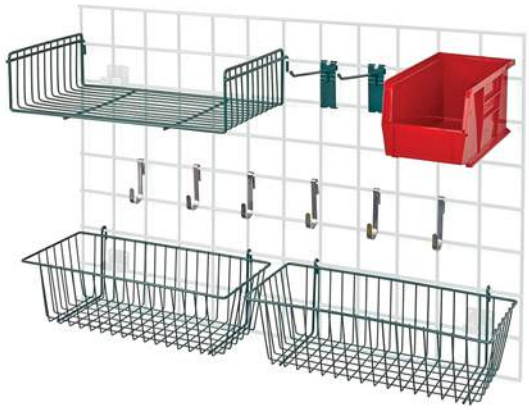

SG-A2RD
Accessory Pack #2

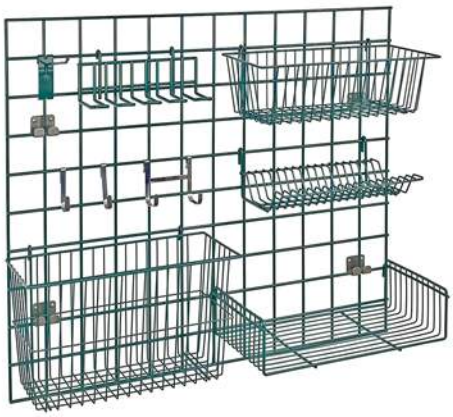

SGK-3036-1P
Light-Duty Task Station

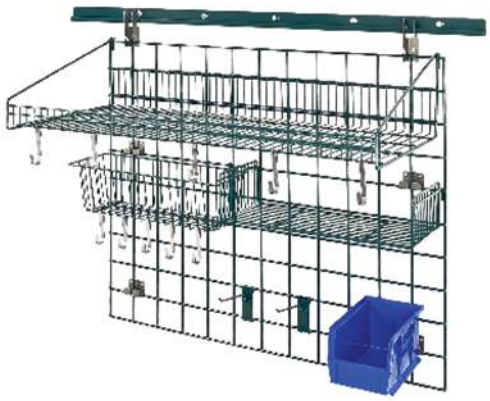

SGK-403036-2P
Standard-Duty Task Station

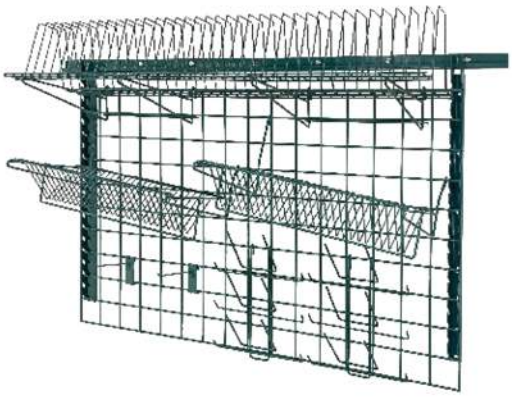

SGK-563048-1P
Medium-Duty Task Station

Recommendations:

Wash Stations: *use shelves, baskets, drying racks and hooks for proper air drying of items used in food preparation.*

Prep Stations: *use shelves, baskets, bins, hooks, spice rack and glove box holder for a more neat work space.*

OLYMPIC STORAGE COMPANY

RELIABLE SPACE... ECONOMICALLY.

OlympicShelving.com

WIRE SHELVING — EPOXY FINISH

- **Unique Design:** The open wire design of these carbon-steel shelves minimizes dust accumulation and allows a free circulation of air, greater visibility of stored items and greater light penetration.
- **Versatile Construction:** Wire shelving can change as quickly as your needs change.
- **Fast, Secure Assembly:** Posts have circular grooves at 1" (25mm) intervals. A tapered split sleeve snaps together around each post. Tapered openings in the shelf corners slide over the tapered split sleeves providing a positive lock. Shelf is assembled in minutes without the use of any special tools.
- **Shelf Wires:** Run front to back, allowing you to slide items on and off shelves smoothly.
- **Shelf Accessibility:** Shelves can be loaded/unloaded easily from all sides. This open construction allows use of maximum storage space of cube.
- **Adjustability:** Shelves can be adjusted at 1" (25mm) intervals along the entire length of the post.
- **Finish:** Olympic Green-Guard™ or Gray-Guard™ epoxy finish with chromate substrate.
- **Posts:** Bolt levelers compensate for surface irregularities on stationary posts.
- **Warranty:** Olympic Green-Guard™ and Gray-Guard™ epoxy coated shelves and posts carry a 10 year limited warranty against rust and corrosion.



Olympic Green-Guard™ Epoxy



Olympic Gray-Guard™ Epoxy

NSF

OLYMPIC STORAGE COMPANY

To learn more, or place an order, visit **OlympicShelving.com** or email us at: **info@olympicshelving.com**

Information and specifications are subject to change without notice. Please confirm at the time of order.

Copyright © 2024 Olympic Storage Company
OLY-001E | Rev. 3/25

WIRE SHELVES

Width/Length (in.)	Width/Length (mm)	Approx. Weight Per Shelf (lbs.)	Approx. Weight Per Shelf (kg)	Pack Quantity	Cat. No. Green-Guard™ Epoxy	Cat. No. Gray-Guard™ Epoxy
14 x 24	355 x 610	5.1	2.3	4	**J1424K**	**J1424G**
14 x 30	355 x 760	6.0	2.7	4	**J1430K**	**J1430G**
14 x 36	355 x 914	6.8	3.1	4	**J1436K**	**J1436G**
14 x 42	355 x 1066	8.0	3.6	4	**J1442K**	**J1442G**
14 x 48	355 x 1219	10.2	4.6	4	**J1448K**	**J1448G**
14 x 60	355 x 1524	13.2	6.0	2	**J1460K**	**J1460G**
14 x 72	355 x 1829	15.5	7.0	2	**J1472K**	**J1472G**
18 x 24	457 x 610	5.6	2.5	4	**J1824K**	**J1824G**
18 x 30	457 x 760	6.7	3.0	4	**J1830K**	**J1830G**
18 x 36	457 x 914	7.8	3.5	4	**J1836K**	**J1836G**
18 x 42	457 x 1066	8.8	4.0	4	**J1842K**	**J1842G**
18 x 48	457 x 1219	9.8	4.4	4	**J1848K**	**J1848G**
18 x 54	457 x 1370	11.8	5.4	2	**J1854K**	**J1854G**
18 x 60	457 x 1524	13.6	6.2	2	**J1860K**	**J1860G**
18 x 72	457 x 1829	16.7	7.6	2	**J1872K**	**J1872G**
21 x 24	530 x 610	6.6	3.0	4	**J2124K**	**J2124G**
21 x 30	530 x 760	8.0	3.6	4	**J2130K**	**J2130G**
21 x 36	530 x 914	9.0	4.1	4	**J2136K**	**J2136G**
21 x 42	530 x 1066	10.2	4.6	4	**J2142K**	**J2142G**
21 x 48	530 x 1219	13.0	5.9	4	**J2148K**	**J2148G**
21 x 54	530 x 1370	14.1	6.4	2	**J2154K**	**J2154G**
21 x 60	530 x 1524	15.3	6.9	2	**J2160K**	**J2160G**
21 x 72	530 x1829	18.0	8.2	2	**J2172K**	**J2172G**
24 x 24	610 x 610	7.4	3.4	4	**J2424K**	**J2424G**
24 x 30	610 x 760	9.3	4.2	4	**J2430K**	**J2430G**
24 x 36	610 x 914	10.3	4.7	4	**J2436K**	**J2436G**
24 x 42	610 x 1066	11.6	5.3	4	**J2442K**	**J2442G**
24 x 48	610 x 1219	13.1	5.9	4	**J2448K**	**J2448G**
24 x 54	610 x 1370	15.0	6.8	2	**J2454K**	**J2454G**
24 x 60	610 x 1524	17.0	7.7	2	**J2460K**	**J2460G**
24 x 72	610 x 1829	20.6	9.3	2	**J2472K**	**J2472G**

Load Capacity:
Up to 48" (1220mm) Length = 800 lbs. (363kg), evenly distributed.
54"-72" (1829mm) Length = 600 lbs. (272kg), evenly distributed.

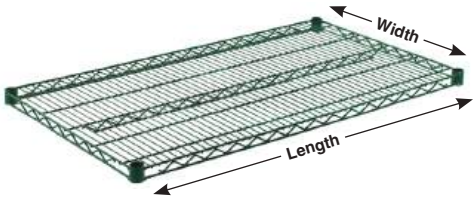



Split Sleeves

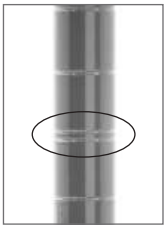

Posts are grooved at 1" (25mm) increments and numbered at 2" (50mm) increments. Posts are double-grooved every 8" (203mm) for easy identification.

POSTS — 1 PIECE

Pack Quantity	Cat. No. Stationary Post Green-Guard™ Epoxy	Cat. No. Stationary Post Gray-Guard™ Epoxy	Height* Stationary Post (in.)	Height* Stationary Post (mm)	Approx. Weight Per Post (lbs.)	Approx. Weight Per Post (kg)	Cat. No. Mobile Post Green-Guard™ Epoxy	Cat. No. Mobile Post Gray-Guard™ Epoxy	Height** Mobile Post (in.)	Height** Mobile Post (mm)	Approx. Weight Per Post (lbs.)	Approx. Weight Per Post (kg)
4	**J7K**	———	7½	191	0.5	0.2	**J7UK**	———	6¾	171	0.4	0.2
4	**J13K**	**J13G**	14½	370	0.9	0.4	**J13UK**	**J13UG**	13¾	349	0.8	0.4
4	**J33K**	**J33G**	34½	875	1.7	0.8	**J33UK**	**J33UG**	34¾	857	1.5	0.7
4	**J54K**	**J54G**	54 9/16	1385	2.5	1.1	**J54UK**	**J54UG**	53 13/16	1366	2.3	1.0
4	**J63K**	**J63G**	62 9/16	1590	3.0	1.4	**J63UK**	**J63UG**	61 13/16	1570	2.8	1.3
4	**J74K**	**J74G**	74⅝	1895	3.6	1.6	**J74UK**	**J74UG**	73⅞	1873	3.4	1.5
4	**J86K**	**J86G**	86⅝	2200	4.1	1.9	**J86UK**	**J86UG**	85⅞	2181	3.9	1.8

**Height includes leveling bolt and cap.
**Mobile posts come without leveling bolt assembly and accommodate stem casters.
**Height is for post only.

OLYMPIC STORAGE COMPANY

Information and specifications are subject to change without notice. Please confirm at the time of order.

To learn more, or place an order, visit **OlympicShelving.com**
or email us at: **info@olympicshelving.com**

Copyright © 2024 Olympic Storage Company
OLY-001E

CMA RESTAURANT SUPPLY & DESIGN, INC.

Submittal Sheet

04/21/2026

ITEM# 45 - EXISTING FOOD PACKAGING MACHINE (2 EA REQ'D)

VacMaster VP320

VacMaster™ VP320 Chamber Vacuum Sealer, countertop, 16" removable seal bar with double seal wire, 16-3/4" x 18" x 7" chamber, easy-to-use digital control panel, vacuum & seal, seal time, & pressure indicator, 10-99 seconds cycle time, heavy-duty transparent lid, stainless steel body, 1-1/2 HP rotary oil pump, includes filler plates, user guide, maintenance kit, & (60) assorted chamber pouches, 110v/60/1-ph, 20 amps (use dedicated outlet)

ACCESSORIES

Mfr	Qty	Model	Spec
VacMaster	2		1 year warranty, standard

VACMASTER® VP320

The **VACMASTER® VP320** Chamber Machine is our most conventional and reliable tabletop vacuum packaging machine. Designed to meet the demand of medium to high volume commercial and food service operations, this unit features a full 16” seal bar and a spacious stainless steel chamber — large enough to handle a 16” x 20” pouch. Seal bars are easy to remove, requiring no tools, which makes cleaning and maintenance simple and fast!





FEATURES

- Stainless steel body
- 16” seal bar with double seal wire
- Easy-to-use digital control panel
- Easy-to-read pressure indicator
- Heavy-duty, transparent lid
- 1.5 HP rotary oil pump

IDEAL FOR

- Small restaurants to medium processors
- Supermarkets
- Restaurants
- Laboratories



The Professional Way to Prep, Cook, Package!

VACMASTER® VP320



INCLUDES

- Assorted Chamber Pouches
- Filler Plates
- User's Guide

ACCESSORIES (not included)

- Chamber Pouches
  Premium design for optimal vacuum packaging
- Storage Canisters
  Available in two stackable sizes
- VacMaster® Bone Guard
  Prevent punctures when vacuum packaging
- VacMaster® Multi-Ring Bag Stand
  Holds and supports bags for easy filling



Specifications	
Chamber Size: (W D H)	16.75" x 18" x 7"
Overall Dimensions: (W D H)	22.25" x 20" x 19"
Seal Bars:	16"
Pump:	1.5 HP Rotary Oil
Cycle Time:	20 - 40 Seconds
Electrical Specifications:	110V, 60Hz, 13 Amps
Weight:	185 lbs.

CMA
RESTAURANT SUPPLY & DESIGN, INC.

Submittal Sheet

04/21/2026

ITEM# 46 - STAINLESS STEEL WALL CAP (1 EA REQ'D)

Pacific Stainless

Custom stainless steel wall cap to cover partial height wall.

<Incomplete>

Description: Stainless steel wall cap

Notes: Custom stainless steel wall cap to cover partial height wall.

CMA
RESTAURANT SUPPLY & DESIGN, INC.

Submittal Sheet

04/21/2026

ITEM# 47 - SPARE NO.

<Spare No.>

Description: Spare No.

Notes:

CMA
RESTAURANT SUPPLY & DESIGN, INC.

Submittal Sheet

04/21/2026

ITEM# 48 - SPARE NO.

<Spare No.>

Description: Spare No.

Notes:

CMA
RESTAURANT SUPPLY & DESIGN, INC.

Submittal Sheet

04/21/2026

ITEM# 49 - EXISTING DEHYDRATOR (1 EA REQ'D)

OWNER

Existing Excalibur COMM2 dehydrator

Excalibur
AMERICA'S BEST DEHYDRATOR

Project Name: _____

Location: _____

Item #: _____ **Qty:** _____

Model: _____

COMM2 - 2 Zone, Commercial Dehydrator

MODEL: ☐ COMM2 ☐ COMM2(EO)



COMM2/COMM2(EO)

Excalibur's 2 Zone Production Model is designed with efficiency in mind. Supplied with standard commercial size drying racks which make it easy to pre-stage and unload product using readily available restaurant carts. Our product is efficient by allowing you to dehydrate twice the product as other commercial models while only using about 1/2 the electricity.

FEATURES AND CONSTRUCTION

- 136 sq. ft. drying capacity with two zones
- Includes forty-two (42) stainless steel trays
- Exterior and interior is constructed of stainless steel
- Digital touch screen with 99-hour timer
- Eight (8) 6.5" fans
- Convenient front access control panel
- Adjustable Thermostat range of 70°F to 180°F with automatic cool down and shut off
- Dual zones with one controller
- Includes four (4) swivel casters, two with locks
- Made in the USA with USA and globally sourced materials

ELECTRIC

Domestic: 120/208-240V, 5000W
International Voltage Available

3RD PARTY APPROVALS

c UL us NSF

EXCALIBUR WARRANTY (USA / CANADA)

Excalibur Dehydrators are warrantied for one year limited warranty US and International.

Contact Excalibur for details at mail@excaliburdehydrator.com or 888.610.0498

Excalibur • 3355 Enterprise Ave. Suite 160 • Fort Lauderdale, FL 33331
Tel: 888.610.0498 • Fax: 916.381.4256 • mail@excaliburdehydrator.com • www.excaliburdehydrator.com

COMM2
2 Zone, Commercial Dehydrator









MODEL	DIMENSIONS (W x D x H)	WATTS	NO. OF TRAYS	Sq. Ft.	WEIGHT
COMM2	30” x 30” x 71” 30” x 35”* x 71” *NOTE: With 5” Backstop installed	5000W	42	136	535 lbs
COMM2(EO)	30” x 30” x 71” 30” x 35”* x 71” *NOTE: With 5” Backstop installed	5000W	42	136	535 lbs

06/14/22
Due to periodic changes in designs, methods, procedures, policies and regulations, the specifications contained in this document are subject to change without notice. While we exercise good faith efforts to provide information that is accurate, we are not responsible for errors or omissions in information provided or conclusions reached as a result of using the specifications. By using the information provided, the user assumes all risks in connection with such use.

CMA
RESTAURANT SUPPLY & DESIGN, INC.

Submittal Sheet

04/21/2026

ITEM# 50 - SHELVING UNIT, WITH METAL POST (1 EA REQ'D)

Metro PR-243074K3-S-4

Super Erecta Pro® Starter Unit, 24"W x 30"D x 74"H, (4) corrosion resistant shelves with removable polymer shelf mats, (4) bags of split sleeves, (4) posts, NSF

The spec sheet for this item can be viewed on item 5)

CMA
RESTAURANT SUPPLY & DESIGN, INC.

Submittal Sheet

04/21/2026

ITEM# 51 - PLANETARY MIXER (1 EA REQ'D)

Globe (Middleby) SP20

(QUICK SHIP) Planetary Mixer, bench model, 20 qt. (19 liter) capacity, 3-speed (fixed), #12 hub, includes: stainless steel removable bowl guard with built-in ingredient chute, 20 qt. stainless steel bowl, aluminum spiral dough hook, stainless steel wire whip & aluminum flat beater, interlocked bowl lift, gear-driven motor, front-mounted touchpad controls with 60-minute digital timer & last batch recall, non-slip rubber feet, cast iron body, enamel gray finish, 1/2 HP, 115v/60/1-ph, 6.0 amps, cord, NEMA 5-15P, NSF, cETLus (Ships within 1-2 days)

ACCESSORIES

Mfr	Qty	Model	Spec
Globe (Middleby)	1		Quick Ship items have limited configurations & that standard configuration may not apply. Contact factory for details
Globe (Middleby)	1		2 year parts & labor warranty (1 year parts only warranty on agitator and hub accessories, no labor provided) (excludes wear items), standard

Project Name: _____ AIA#: _____

Model #: _____ Location: _____

SIS#: _____ Item #: _____ Quantity: _____

20 Quart Planetary Bench Mixer

The Perfect Mix of Value, Performance & Durability

Features front mounted touch pad control panel with 60-minute digital timer!



NSF ETL Intertek AQ AutoQuotes

Model

❑ *SP20*

Standard Features

- Powerful 1/2 HP custom built motor
- Gear-driven, high-torque transmission
- Heat-treated hardened steel alloy gears & shafts
- Three fixed speeds
- Permanently lubricated transmission
- Thermal overload protection
- Front-mounted touch pad controls with 60-minute digital timer and last-batch recall
- Removable stainless steel, interlocking bowl guard with built-in fully welded ingredient chute
- Interlocked bowl lift
- Rigid cast iron body
- Industry standard #12 attachment hub
- NSF approved enamel gray paint
- 6-foot cord and ground plug

Standard Accessories/Attachments

- 20 qt. stainless steel bowl (#304 series)
- Aluminum flat beater
- Stainless steel wire whip
- Aluminum spiral dough hook
- Non-slip rubber feet

Warranty

- *Two years parts and labor*

Optional Accessories/Attachments

- Seismic flange kit
- Polycarbonate splash shield insert
- Slicer/shredder/grater for #12 hub
- Meat grinder for #12 hub
- Meat tenderizer for #12 hub
- Strip cutter for #12 hub
- Stainless steel flat beater
- Stainless steel spiral dough hook
- 10 qt. adapter kit
- 12 qt. adapter kit
- Mixer table with undershelf
- Extended warranty

To select options, see complete list on back

Approved by: _____ Date: _____

GLOBE FOOD EQUIPMENT COMPANY | Globe® 20 Quart Planetary Bench Mixer SP20

2153 Dryden Rd., Dayton, OH 45439 | 937-299-5493 | 800-347-5423 | Fax: 937-299-4147 | www.globefoodequip.com

11/25/2019 Printed in the U.S. © Globe Food Equipment Company Specifications are subject to change without notice.

20 Quart Planetary Bench Mixer

SP20

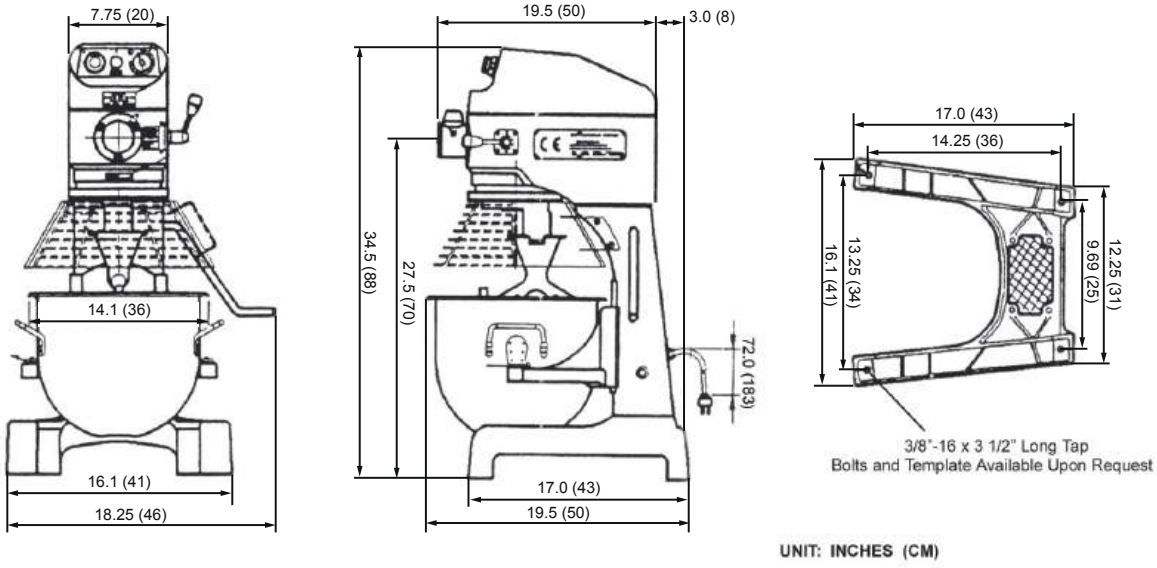

UNIT: INCHES (CM)

Drawings available through KCL at www.kclcad.com.

SPECIFICATIONS

Model	Motor	Volts	Amps	Transmission Type	Capacity	Controls	Agitator Speeds (RPMs)			Attachment Speeds (RPMs)		
							1st	2nd	3rd	1st	2nd	3rd
SP20	1/2 HP	115/60/1	6	Gear	20 qt 19 liter	Front-mounted digital controls & timer	104	194	353	59	110	201

Cord & Plug: Attached 6-foot flexible 3-wire cord with molded plug fits a grounded receptacle. NEMA 5-15P

DIMENSIONS | SHIPPING INFORMATION

Carton reinforced for shipping. The weight and dimensions of this reinforced carton are included below and may vary from shipment to shipment.
This product ships on a pallet. Freight class 85.

Model	Base Foot Print	Overall Dimensions	Net Wt	Shipping Dimensions	Shippping Wt
SP20	16" W x 17" D (41 cm x 43 cm)	18.25" W x 19.5" D x 34.5" H (46 cm x 50 cm x 88 cm)	199 lbs (80 kg)	32" W x 40" D x 48" H (81 cm x 102 cm x 122 cm)	270 lbs (122 kg)

Mixer is constructed of a rigid cast iron body with front-mounted controls and a digital 60-minute timer with last-batch recall. Mixer has a 1/2 HP custom built motor with overload protection and gear-driven, high torque permanently lubricated transmission consisting of heat-treated hardened steel alloy gears and shafts. Mixer comes with 20 qt. stainless steel bowl, aluminum flat beater, stainless steel wire whip, aluminum dough hook and non-slip rubber feet. Interlocked, removable stainless steel bowl guard with fully welded on ingredient chute. Mixer has #12 attachment hub and interlocked bowl lift. Mixer is NSF and ETL listed. Two-year parts and labor warranty.

OPTIONAL MIXER ACCESSORIES AND HUB ATTACHMENTS

MIXER:

- ❑ **XXSEISMIC KIT-SM** Seismic kit
- ❑ **XXBGSHIELD-20** Bowl guard shield
- ❑ **XXBOWL-20** 20 qt. stainless steel (S/S)bowl
- ❑ **XXBEAT-20** Alum. flat beater
- ❑ **XXBEAT-20SS** S/S flat beater
- ❑ **XXHOOK-20** Alum. dough hook
- ❑ **XXHOOK-20SS** S/S dough hook
- ❑ **XXJHOOK-20** Alum. J dough hook
- ❑ **XXWHIP-20** S/S wire whip
- ❑ **XXHDWHIP20-4** Heavy-duty 2.8 mm S/S wire whip
- ❑ **XXAWHIP-20** S/S Aileron (wing) whip
- ❑ **XXSCRP-20** scraper with mounting kit
- ❑ **XXACC10-20** Adapter kit - 10 qt bowl, hook, beater and whip
- ❑ **XXACC12-20** Adapter kit - 12 qt bowl, hook, beater and whip
- ❑ **XXPASTRY-20** Alum. pastry knife
- ❑ **XTable** S/S countertop mixer table with under shelf (30" W x 24" D x 24" H

HUB:

- ❑ **XVSGH** 9" Slicer/Shredder/Grater housing only (no plates included-must select from plates listed on this sheet)
- ❑ **XASP** Adjustable slicing plate (for vegetables only)
- ❑ **XPH** Plate holder -*only 1 required
- ❑ **L00670** Meat Tenderizer attachment
- ❑ **L00783** Strip Cutter attachment

Shredding Plates:

- ❑ **XSP332*** 3/32" (2.3 mm)
- ❑ **XSP316*** 3/16" (4.7 mm)
- ❑ **XSP14*** 1/4" (6.3 mm)
- ❑ **XSP516*** 5/16" (7.9 mm)
- ❑ **XSP12*** 1/2" (12.7 mm)
- ❑ **XGP*** Grating plate
- ❑ **XMCA-SS** Meat grinder assembly (Polished stainless steel cylinder, worm gear, ring, and s/s pan. Includes knife, 3/16" plate, and pusher.)
- ❑ **XXCK** Chopper knife for XMCA-SS

Chopper Plate Sizes Available:

- ❑ **CP02-12** 1/16" (2 mm)
- ❑ **CP04-12** 5/32" (4 mm)
- ❑ **CP05-12** 3/16" (5 mm)
- ❑ **CP06-12** 1/4" (6 mm)
- ❑ **CP08-12** 5/16" (8 mm)
- ❑ **CP10-12** 3/8" (10 mm)
- ❑ **CP12-12** 1/2" (12 mm)
- ❑ **CP14-12** 9/16" (14 mm)
- ❑ **CP16-12** 5/8" (16 mm)
- ❑ **CP18-12** 11/16" (18 mm)
- ❑ **CP00-12** Stuffing plate
- ❑ **XST12** 1/2" Stuffing tube (mutton)
- ❑ **XST34** 3/4" Stuffing tube (pork)
- ❑ **FACTORY INSTALLED OPTION: XXCORR-20** Correctional package, includes tamper resistant external fasteners.
- ❑ **EXTENDED WARRANTY SP-XD1020** Extended warranty for SP20 mixer, extends factory warranty to 3 years. ***Available only at time of purchase.***

2153 Dryden Rd., Dayton, OH 45439 | 937-299-5493 | 800-347-5423 | Fax: 937-299-4147 | www.globefoodequip.com

11/25/2019 Printed in the U.S. © Globe Food Equipment Company Specifications are subject to change without notice.

CMA
RESTAURANT SUPPLY & DESIGN, INC.

Submittal Sheet

04/21/2026

ITEM# 52 - EQUIPMENT STAND, FOR MIXER / SLICER (1 EA REQ'D)

John Boos MS4-2430SSK-X

Machine Stand, heavy duty, 30"W x 24"D x 20-1/4"H overall size, 14/300 stainless steel top with marine edge, stainless steel adjustable lower shelf, stainless steel legs & bullet feet, NSF, KD

ACCESSORIES

Mfr	Qty	Model	Spec
John Boos	1		Standard flyer accessories only, NO modifications to flyer items allowed or their accessories
John Boos	1	CAS01-R-X	Casters, 5", heavy duty, locking, for 1-5/8" diameter legs (set of 4)

SPEC SHEET

"MS4-SSK" EQUIPMENT STANDS

14GA Stainless Steel Top w/18GA Stainless Steel Base & Shelf

FEATURES:

- 14GA Type 300 Stainless Steel Top With #4 Polish, Satin Finish
- Reinforced With A 1/2" Channel Running Entire Length Of Table
- Shelf Adjustable To Desired Height
- Adjustable Bullet Feet
- Shipped Knocked-Down, Easy-To-Assemble

SPECIFICATIONS:

- Top: Stainless Steel Tops Are TIG Welded, Exposed Welds Are Polished To Match Adjacent Surface
- Base: MIG Welded Stainless Frame
- Top: 14GA Stainless Steel Type 300 Stainless Steel With #4 Polish, Satin Finish
- Shelf: 18GA Stainless Steel
- Gussets: Stainless Steel
- Feet: 1" Adjustable Bullet Feet

CERTIFICATIONS:



MS4-2424SSK

"MS4-SSK" EQUIPMENT STANDS

MODEL	SIZE (L X W X H)	WEIGHT (LBS)
MS4-2424SSK	24"x24"x20-1/4"	34
MS4-2430SSK	30"x24"x20-1/4"	38
MS4-3030SSK	30"x30"x20-1/4"	43
MS4-3036SSK	36"x30"x20-1/4"	52

ALL DIMENSIONS ARE TYPICAL. TOLERANCE +/- .500". JOHN BOOS & CO. RESERVES THE RIGHT TO CHANGE SPECIFICATIONS WITHOUT NOTICE.

DETAILED SPECIFICATIONS

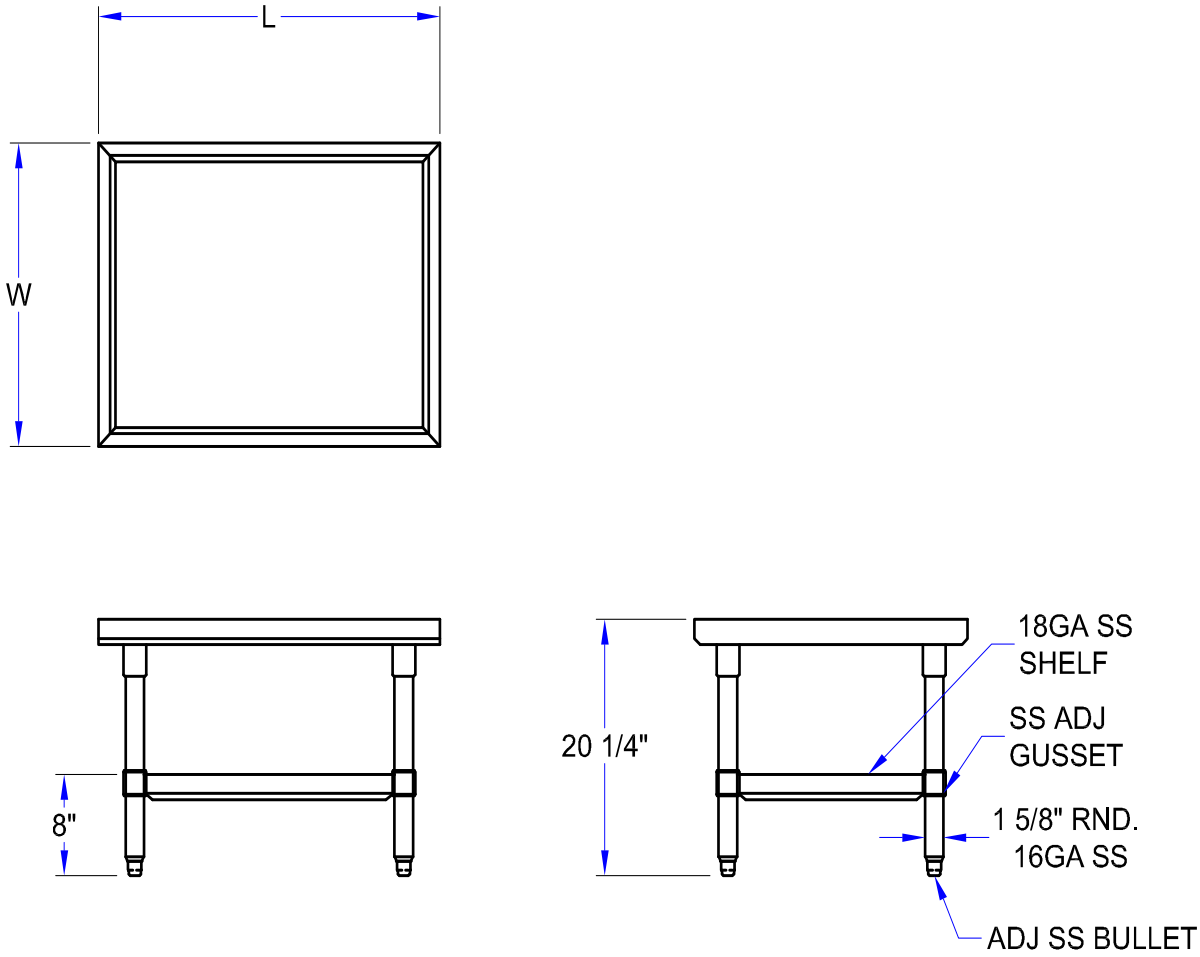

"MS4-SSK" EQUIPMENT STANDS

MODEL	SIZE (L X W X H)	WEIGHT (LBS)
MS4-2424SSK	24"x24"x20-1/4"	34
MS4-2430SSK	30"x24"x20-1/4"	38
MS4-3030SSK	30"x30"x20-1/4"	43
MS4-3036SSK	36"x30"x20-1/4"	52

ALL DIMENSIONS ARE TYPICAL. TOLERANCE +/- .500". JOHN BOOS & CO. RESERVES THE RIGHT TO CHANGE SPECIFICATIONS WITHOUT NOTICE.

CMA
RESTAURANT SUPPLY & DESIGN, INC.

Submittal Sheet

04/21/2026

ITEM# 53 - WORK TABLE, STAINLESS STEEL TOP (1 EA REQ'D)

Pacific Stainless WKT6030A6S

Work Table, 60"W x 30"D, Series A, 16/304 stainless top with backsplash, 1" x 6", 14 gauge galvanized U-Channels, stainless undershelf welded to (4) each 1-5/8" stainless tube legs with stainless adjustable feet, fully assembled, NSF, Made in USA

Stainless Steel Work Tables - "A6" Series - 4 Legs
Part # - WKT####A6S

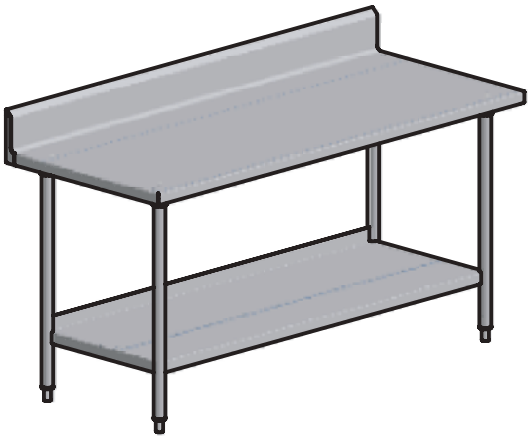

Item#: _____ Qty: ____

Model#: _____

NSF

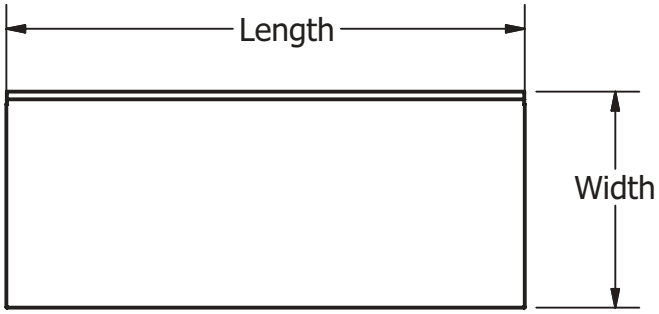

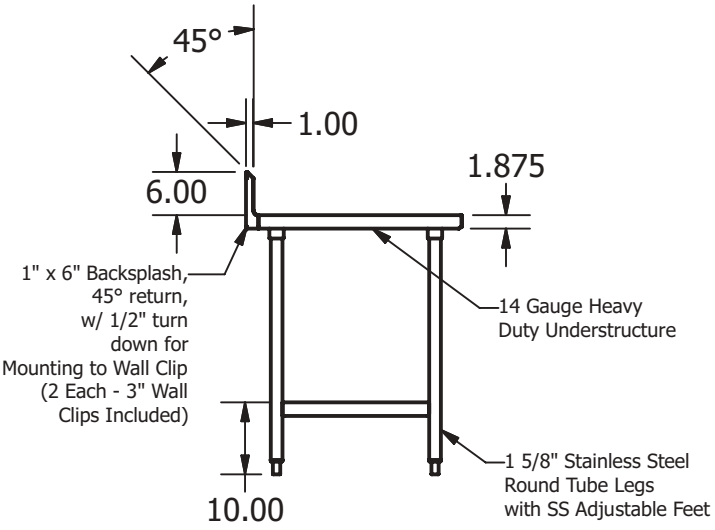

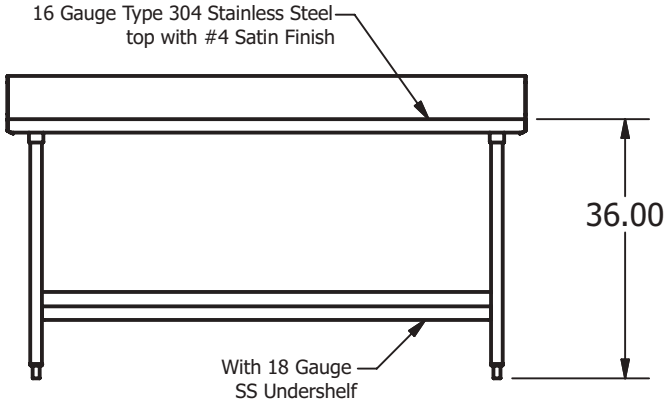

Features:

* Work table tops are constructed of 16 Gauge 304 Stainless Steel with #4 Satin Finish
* Tables have a 14 gauge heavy duty understructure
* With an 18 gauge stainless steel undershelf
* 1 5/8" Stainless steel round tube legs with SS adjustable feet
* Table working heights are 36"

Options:

Options:	Model Number	U/M
Adjustable Flange Feet	CHGA10-0854	each
Casters, (without brake)	CHGC23-1450	each
Casters, (with brake)	CHGC23-1451	each
15" x 20" Drawer Assembly w/ Plastic Pan	SDA152006P	each
15" x 20" Drawer Assembly w/ SS Pan	SDA152006S	each
20" x 20" Drawer Assembly w/ Plastic Pan	SDA202006P	each
20" x 20" Drawer Assembly w/ SS Pan	SDA202006S	each
Lower Table Height (State table work surface height)	LTH001	Lot

Orders Phone 888-618-2122 Fax 503-397-9596 www.pacificstainless.com

Pacific Stainless PRODUCTS, INC.

Stainless Steel Work Tables

"A6" Series - Table Lengths (15" to 138")



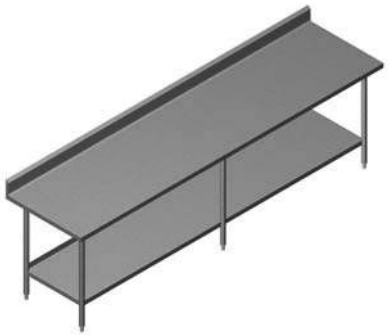

Four Leg "A6" Series Tables with Undershelf

Length	24" Wide Model	30" Wide Model	33" Wide Model	36" Wide Model
15"	WKT 1524A6S	WKT 1530A6S	WKT1533 A6S	WKT1536A6S
18"	WKT 1824A6S	WKT 1830A6S	WKT1833 A6S	WKT1836A6S
21"	WKT 2124A6S	WKT 2130A6S	WKT2133 A6S	WKT2136A6S
24"	WKT 2424A6S	WKT 2430A6S	WKT2433 A6S	WKT2436A6S
27"	WKT 2724A6S	WKT 2730A6S	WKT2733 A6S	WKT2736A6S
30"	WKT 3024A6S	WKT 3030A6S	WKT3033 A6S	WKT3036A6S
33"	WKT 3324A6S	WKT 3330A6S	WKT3333 A6S	WKT3336A6S
36"	WKT 3624A6S	WKT 3630A6S	WKT3633 A6S	WKT3636A6S
42"	WKT 4224A6S	WKT 4230A6S	WKT4233 A6S	WKT4236A6S
48"	WKT 4824A6S	WKT 4830A6S	WKT4833 A6S	WKT4836A6S
54"	WKT 5424A6S	WKT 5430A6S	WKT5433 A6S	WKT5436A6S
60"	WKT 6024A6S	WKT 6030A6S	WKT6033 A6S	WKT6036A6S
66"	WKT 6624A6S	WKT 6630A6S	WKT6633 A6S	WKT6636A6S
72"	WKT 7224A6S	WKT 7230A6S	WKT7233 A6S	WKT7236A6S

Six Leg "A6" Series Tables with Undershelf

Length	24" Wide Model	30" Wide Model	33" Wide Model	36" Wide Model
72"	WKT 67224A6S	WKT 67230A6S	WKT 67233A6S	WKT67236A6S
78"	WKT 7824A6S	WKT 7830A6S	WKT 7833A6S	WKT 7836A6S
84"	WKT 8424A6S	WKT 8430A6S	WKT 8433A6S	WKT 8436A6S
90"	WKT 9024A6S	WKT 9030A6S	WKT 9033A6S	WKT 9036A6S
96"	WKT 9624A6S	WKT 9630A6S	WKT 9633A6S	WKT 9636A6S
102"	WKT 10224A6S	WKT 10230A6S	WKT 10233A6S	WKT 10236A6S
108"	WKT 10824A6S	WKT 10830A6S	WKT 10833A6S	WKT 10836A6S
114"	WKT 11424A6S	WKT 11430A6S	WKT 11433 A6S	WKT 11436 A6S
120"	WKT 12024A6S	WKT 12030A6S	WKT 12033A6S	WKT 12036A6S
126"	WKT 12624A6S	WKT 12630A6S	WKT 12633A6S	WKT 12636A6S
132"	WKT 13224A6S	WKT 13230A6S	WKT 13233A6S	WKT 13236A6S
138"	WKT 13824A6S	WKT 13830A6S	WKT 13833A6S	WKT 13836A6S

"Custom Configurations Available"

Phone 888.618.2122 Fax 503.397.9596 E-mail info@pacificstainless.com

CMA RESTAURANT SUPPLY & DESIGN, INC.

Submittal Sheet

04/21/2026

ITEM# 54 - WALL MOUNT SHELF UNIT (1 EA REQ'D)

Quantum XXX

Wire wall shelving, three levels high, (1) 18" deep and (2) 14" deep. To include the following components

ACCESSORIES

Mfr	Qty	Model	Spec
Quantum	4	SG-U44GY	44in UPRIGHT GRAY EPOXY
Quantum	4	SG-CS14GY	Store Grid Shelf Support Bracket, single, for use with 14"W shelves, grey epoxy antimicrobial finish, NSF
Quantum	2	SG-CS18GY	Store Grid Shelf Support Bracket, single, for use with 18"W shelves, grey epoxy antimicrobial finish, NSF
Olympic	2	J1460G	Shelf, wire, 14" x 60", chromate with Olympic Gray-Guard™ epoxy finish, NSF
Olympic	1	J1860G	Shelf, wire, 18" x 60", chromate with Olympic Gray-Guard™ epoxy finish, NSF
Olympic	1		1 year warranty against manufacturing defects
Olympic	1		7 year warranty against rust and corrosion
Olympic	2		1 year warranty against manufacturing defects
Olympic	2		7 year warranty against rust and corrosion

CMA
RESTAURANT SUPPLY & DESIGN, INC.

Submittal Sheet

04/21/2026

ITEM# 55 - REACH-IN REFRIGERATOR (1 EA REQ'D)

True Mfg. - General Foodservice T-43-HC

Refrigerator, reach-in, two-section, stainless steel doors, (6) PVC coated adjustable wire shelves, interior lighting, stainless steel front, aluminum sides, aluminum interior with stainless steel floor, 4" castors, view spec sheet for electrical information & certifications, Made in USA

ACCESSORIES

Mfr	Qty	Model	Spec
True Mfg. - General Foodservice	1		7 year compressor warranty, 7 years parts warranty, 7 year labor warranty, standard. Visit www.truemfg.com for specifics.
True Mfg. - General Foodservice	1		Self-contained refrigeration standard
True Mfg. - General Foodservice	1		Left door hinged left, right door hinged right standard
True Mfg. - General Foodservice	1		4" stem castors, standard (adds 5" to OA height)

TRUE MANUFACTURING CO., INC.
U.S.A. FOODSERVICE DIVISION
2001 East Terra Lane • O'Fallon, Missouri 63366-4434 • (636)240-2400
Fax (636)272-2408 • Toll Free (800)325-6152 • Intl Fax# (001)636-272-7546
Parts Dept. (800)424-TRUE • Parts Dept. Fax# (636)272-9471 • www.truemfg.com

Project Name: _____ *AIA #*

Location: _____

Item #: _____ *Qty:* _____ *SIS #*

Model #: _____

Model:
T-43-HC

T-Series:
Reach-In Solid Swing Door Refrigerator with Hydrocarbon Refrigerant



T-43-HC

- True's solid door reach-in's are designed with enduring quality that protects your long term investment.
- Designed using the highest quality materials and components to provide the user with colder product temperatures, lower utility costs, exceptional food safety and the best value in today's food service marketplace.
- High capacity, factory balanced, refrigeration system holds 33°F to 38°F (.5°C to 3.3°C) for best food preservation in extreme conditions.
- Factory engineered, self-contained, capillary tube system using environmentally friendly R290 hydro carbon refrigerant that has zero (0) ozone depletion potential (ODP), & three (3) global warming potential (GWP).
- Stainless steel solid doors and front. The finest stainless available with higher tensile strength for fewer dents and scratches.
- LED interior lighting provides more even lighting throughout the cabinet. Safety shielded.
- Adjustable, heavy duty PVC coated shelves.
- Positive seal self-closing doors. Lifetime guaranteed door hinges and torsion type closure system.

Bottom mounted units feature:

- "No stoop" lower shelf.
- Storage on top of cabinet.
- Compressor performs in coolest, most grease free area of kitchen.
- Easily accessible condenser coil for cleaning.

ROUGH-IN DATA

Specifications subject to change without notice.
Chart dimensions rounded up to the nearest ⅛" (millimeters rounded up to next whole number).

Model	Doors	Shelves	Cabinet Dimensions (inches) (mm) W	D	H*	HP	Voltage	Amps	NEMA Config.	Cord Length (total ft.) (total m)	Crated Weight (lbs.) (kg)
T-43-HC	2	6	47 1194	29½ 750	78⅜ 1991	½ ⅓	115/60/1 230-240/50/1	5.4 2.4	5-15P ▲	Varies Varies	380 173

* Height does not include 5" (127 mm) for castors or 6" (153 mm) for optional legs.

▲Plug type varies by country.

MADE WITH INNOVATION IN THE USA · 5 YEAR COMPRESSOR WARRANTY USA · ENERGY STAR · c UL us · CE · natural refrigerant.

6/18-A Printed in U.S.A.

APPROVALS:

AVAILABLE AT:

Model:
T-43-HC

T-Series:
Reach-In Solid Swing Door Refrigerator with Hydrocarbon Refrigerant

STANDARD FEATURES

DESIGN
- True's commitment to using the highest quality materials and oversized refrigeration systems provides the user with colder product temperatures, lower utility costs, exceptional food safety and the best value in today's food service marketplace.

REFRIGERATION SYSTEM
- Factory engineered, self-contained, capillary tube system using environmentally friendly R290 hydro carbon refrigerant that has zero (0) ozone depletion potential (ODP), & three (3) global warming potential (GWP).
- High capacity, factory balanced refrigeration system that maintains cabinet temperatures of 33°F to 38°F (.5°C to 3.3°C) for the best in food preservation.
- State of the art, electronically commutated evaporator and condenser fan motors. ECM motors operate at higher peak efficiencies and move a more consistent volume of air which produces less heat, reduces energy consumption and provides greater motor reliability.
- Bottom mounted condensing unit positioned for easy maintenance. Compressor runs in coolest and most grease free area of the kitchen. Allows for storage area on top of unit.

CABINET CONSTRUCTION
- Exterior - Stainless steel front. Anodized quality aluminum ends, back and top.
- Interior - attractive, NSF approved, white aluminum liner. Stainless steel floor with coved corners.
- Insulation - entire cabinet structure and solid door are foamed-in-place using a high density, polyurethane insulation that has zero ozone depletion potential (ODP) and zero global warming potential (GWP).
- Welded, heavy duty steel frame rail, black powder coated for corrosion protection.
- Frame rail fitted with 4" (102 mm) diameter stem castors - locks provided on front set.

DOORS
- Stainless steel exterior with white aluminum liners to match cabinet interior. Doors extend full width of cabinet shell. Door locks standard.
- Lifetime guaranteed recessed door handles. Each door fitted with 12" (305 mm) long recessed handle that is foamed-in-place with a sheet metal interlock to ensure permanent attachment.
- Positive seal self-closing doors. Lifetime guaranteed door hinges and torsion type closure system.
- Magnetic door gaskets of one piece construction, removable without tools for ease of cleaning.

SHELVING
- Six (6) adjustable, heavy duty PVC coated wire shelves 20⅞"L x 22½"D (531 mm x 572 mm). Four (4) chrome plated shelf clips included per shelf.
- Shelf support pilasters made of same material as cabinet interior; shelves are adjustable on ½" (13 mm) increments.

LIGHTING
- LED interior lighting provides more even lighting throughout the cabinet. Safety shielded.

MODEL FEATURES
- Exterior temperature display.
- Evaporator is epoxy coated to eliminate the potential of corrosion.

ELECTRICAL
- Unit completely pre-wired at factory and ready for final connection to a 115/60/1 phase, 15 amp dedicated outlet. Cord and plug set included.



115/60/1
NEMA-5-15R

OPTIONAL FEATURES/ACCESSORIES
Upcharge and lead times may apply.
- ❑ 6" (153 mm) standard legs.
- ❑ 6" (153 mm) seismic/flanged legs.
- ❑ Alternate door hinging (factory installed).
- ❑ Additional shelves.
- ❑ Half door bun tray racks. Each holds up to eleven 12"L x 20"D (305 mm x 508 mm) sheet pans (sold separately).
- ❑ Full door bun tray racks. Each holds up to twenty-two 12"L x 20"D (305 mm x 508 mm) sheet pans (sold separately).

PLAN VIEW

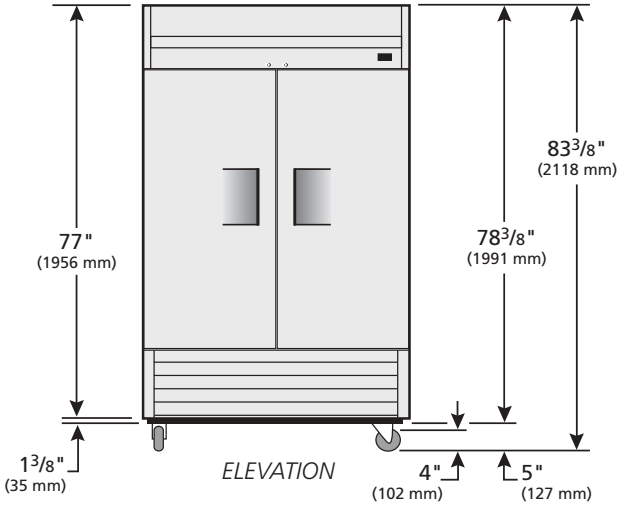

ELEVATION

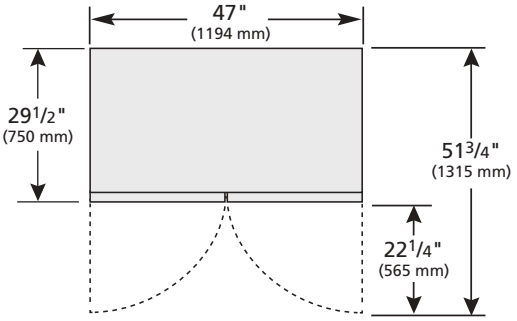

PLAN VIEW

WARRANTY
Three year warranty on all parts and labor and an additional 2 year warranty on compressor. (U.S.A. only)

METRIC DIMENSIONS ROUNDED UP TO THE NEAREST WHOLE MILLIMETER

SPECIFICATIONS SUBJECT TO CHANGE WITHOUT NOTICE

Model	Elevation	Right	Plan	3D	Back
T-43-HC					

TRUE MANUFACTURING CO., INC.
2001 East Terra Lane • O'Fallon, Missouri 63366-4434 • (636)240-2400 • Fax (636)272-2408 • Toll Free (800)325-6152 • Intl. Fax# (001)636-272-7546 • www.truemfg.com

CMA
RESTAURANT SUPPLY & DESIGN, INC.

Submittal Sheet

04/21/2026

ITEM# 56 - HAND SINK (1 EA REQ'D)

John Boos PBHS-W-1410-SSLR-X

Pro-Bowl Hand Sink, wall mount, 14"W x 10" front-to-back x 5" deep bowl, splash mount faucet holes with 4" centers, 1-7/8" drain opening with basket drain, with left & right side splashes, includes mounting bracket, all stainless steel construction, NSF, (faucet NOT included)

The spec sheet for this item can be viewed on item 37)

ACCESSORIES

Mfr	Qty	Model	Spec
John Boos	1		Standard flyer accessories only, NO modifications to flyer items allowed or their accessories

CMA RESTAURANT SUPPLY & DESIGN, INC.

Submittal Sheet

04/21/2026

ITEM# 57 - WALL / SPLASH MOUNT FAUCET (1 EA REQ'D)

T&S Brass B-1146

Workboard Faucet, wall mount, 4" centers, 5-3/4" swivel gooseneck nozzle (includes lock washer to convert to rigid), 2.2 GPM aerator, quarter-turn Eterna cartridges with spring checks, lever handles with color coded indexes, 1/2" NPT male inlets, ADA Compliant

The spec sheet for this item can be viewed on item 38)

ACCESSORIES

Mfr	Qty	Model	Spec
T&S Brass	1	B-1105-KIT	Inlet Kit, 1/2"NPT close elbows, 24" flex supply hoses

CMA
RESTAURANT SUPPLY & DESIGN, INC.

Submittal Sheet

04/21/2026

ITEM# 58 - HAND TOWEL AND SOAP DISPENSER (1 EA REQ'D)

OWNER

Not in CMA contract. To be supplied and installed by the owner.

Owner Supplied 1 Item #58

Description: Hand towel and soap dispenser

Notes: Not in CMA contract. To be supplied and installed by the owner.

CMA
RESTAURANT SUPPLY & DESIGN, INC.

Submittal Sheet

04/21/2026

ITEM# 59 - SPARE NO.

<Spare No.>

Description: Spare No.

Notes:

CMA
RESTAURANT SUPPLY & DESIGN, INC.

Submittal Sheet

04/21/2026

ITEM# 60 - MOP SINK (1 EA REQ'D)

John Boos PBMS2016-6-X

Mop Sink, floor mounted, 24-5/8"W x 19-3/8"D x 10"H overall size, 20"W x 16" front-to-back x 6" deep compartment, 3-1/2" diameter drain, marine edge on front & sides, tile edge on rear, 16/300 stainless steel construction, NSF

John BOOS Since 1887

ITEM #: _____ QTY: _____

MODEL #: _____

PROJECT NAME: _____

012420

3601 S. Banker St. Effingham, IL 62401 • P.O. BOX 609 • Ph: (888) 431-2667 • Fax: (800) 433-2667

"PBMS" PRO-BOWL MOP SINKS - STAINLESS STEEL 16GA

FLOOR MOUNTED W/ HEAVY DUTY FLAT DRAIN

FEATURES:

- FLOOR MOUNTED UNIT ELIMINATES THE NEED OF LIFTING HEAVY CONTAINERS
- TILE EDGE ON REAR OF SINK
- MARINE EDGE ALL AROUND
- RECTANGULAR BOWL FOR INCREASED CAPACITY WITH LARGE 3/4" RADIUSED CORNERS
- STAINLESS STEEL APRON ON FRONT AND SIDES FOR EASE OF CLEANING



PBMS-2016-6

CONSTRUCTION:

- ALL TIG WELDED, EXPOSED WELDS ARE POLISHED TO MATCH ADJACENT SURFACE
- BOTTOM OF BOWLS FORMED FOR DRAINAGE TO 3-1/2" DIAMETER DIE STAMPED OPENING
- 3-1/2" DRAIN ACCEPTS 2" MALE DRAIN PIPE



PBMS-2820-12

MATERIAL:

- 16 GAUGE TYPE 300 STAINLESS STEEL

PRO-BOWL MOP SINKS - STAINLESS STEEL 16GA

MODEL #	QTY
PBMS2016-6	
PBMS2016-12	
PBMS2424-6	
PBMS2424-12	
PBMS2820-6	
PBMS2820-12	

637

DETAILED SPECIFICATIONS

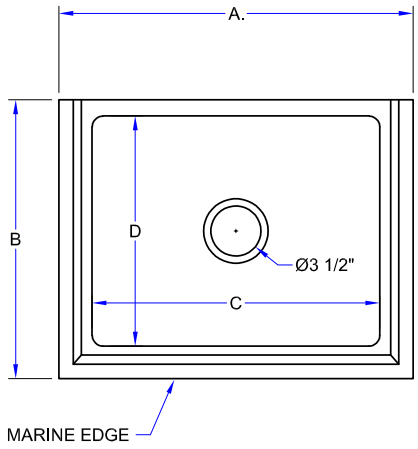

DIMENSIONS

MODEL	A	B	C	D	E	F
PBMS2016-6	24-5/8"	19-3/8"	20"	16"	6"	10"
PBMS2016-12	24-5/8"	19-3/8"	20"	16"	12"	16"
PBMS2424-6	28-5/8"	27-3/8"	24"	24"	6"	10"
PBMS2424-12	28-5/8"	27-3/8"	24"	24"	12"	16"
PBMS2820-6	32-5/8"	23-1/8"	28"	20"	6"	10"
PBMS2820-12	32-5/8"	23-1/8"	28"	20"	12"	16"

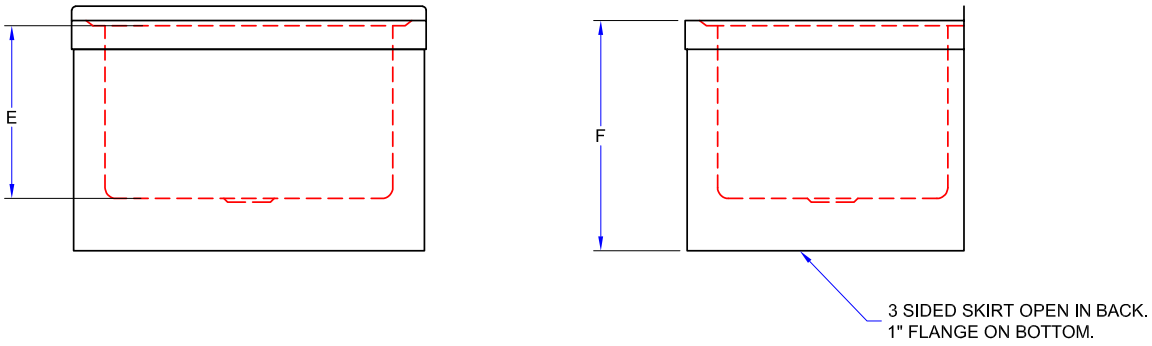

ECONOMY MOP SINKS - STAINLESS STEEL 16GA

MODEL #	DRAIN SIZE	WATER LEVEL	BOWL SIZE	DIMENSIONS (L X W)	WT. (LBS)
PBMS2016-6	3-1/2"	6"	20" X 16"	24-5/8" X 19-3/8"	35
PBMS2016-12	3-1/2"	12"	20" X 16"	24-5/8" X 19-3/8"	45
PBMS2424-6	3-1/2"	6"	24" X 24"	28-5/8" X 27-3/8"	40
PBMS2424-12	3-1/2"	12"	24" X 24"	28-5/8" X 27-3/8"	70
PBMS2820-6	3-1/2"	6"	28" X 20"	32-5/8" X 23-1/8"	50
PBMS2820-12	3-1/2"	12"	28" X 20"	32-5/8" X 23-1/8"	70

SOME UNITS SHIP UNASSEMBLED FOR REDUCED SHIPPING COST. ALL DIMENSIONS ARE TYPICAL. TOLERANCE +/- .500"

John Boos & Co. is constantly engaged in a program of improving products and therefore reserves the right to change specifications without prior notice.

CMA
RESTAURANT SUPPLY & DESIGN, INC.

Submittal Sheet

04/21/2026

ITEM# 61 - SERVICE FAUCET (1 EA REQ'D)

T&S Brass B-0665-BSTP

Service Sink Faucet, 8" centers, 2-3/8" clearance from wall to center of faucet, 8-7/8" from wall to center of outlet, polished chrome-plated finish, vacuum breaker nozzle with 3/4" garden hose thread & pail hook, built in screwdriver stops

T&S BRASS AND BRONZE WORKS, INC.
2 Saddleback Cove / P.O. Box 1088
Travelers Rest, SC 29690

Travelers Rest, SC: 800-476-4103 • Simi Valley, CA: 800-423-0150 • Fax: 864-834-3518 • www.tsbrass.com

Model No.
B-0665-BSTP

Item No.

ADA Compliant

This Space for Architect/Engineer Approval

Job Name_____Date_____

Model Specified_____ Quantity_____

Customer/Wholesaler_____

Contractor_____

Architect/Engineer_____

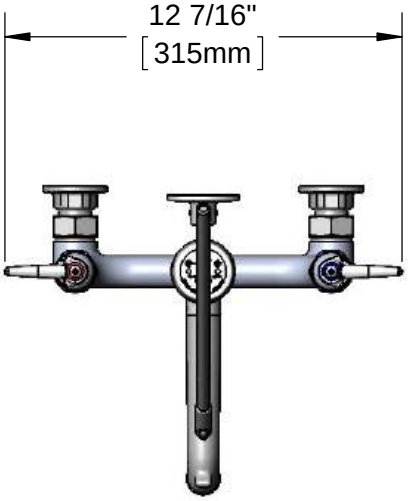

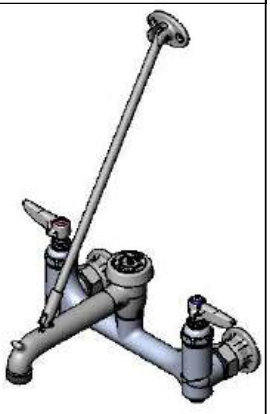

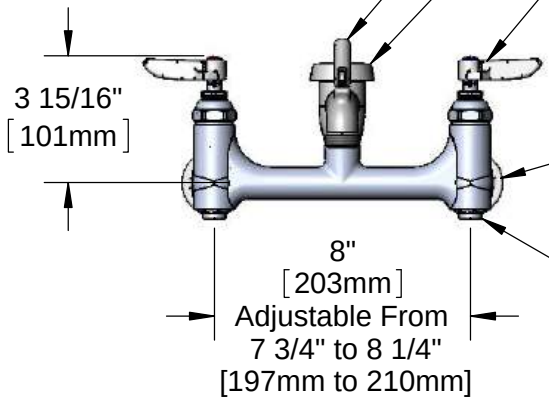

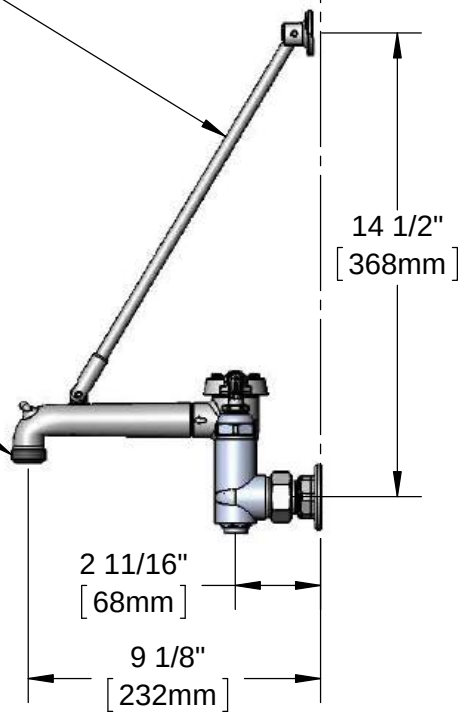

Support Rod w/ Wall Bracket & Mounting Screws

Items Not Shown for Clarity

B-0969 1/2" NPT Vacuum Breaker

Eterna Cartridges w/ Spring Check & Lever Handles w/ Color Coded Indexes

Garden Hose Male Outlet

Ø 2" [51mm] Flanges w/ 1/2" NPT Female Inlets

Built-In Service Stops

Mounting Surface

Product Specifications:
8" Wall Mount Service Sink, Eterna Cartridges w/ Spring Checks, Lever Handles, Upper Support Rod, Built-In Stops, Garden Hose Male Outlet, Polished Chrome Finish, 1/2" NPT Vacuum Breaker & 1/2" NPT Female Inlets

Product Compliance:
ASME A112.18.1 / CSA B125.1
NSF 61 Exempt (Non-Potable)
ANSI A117.1 (ADA)
ASSE 1001 (VB)

Drawn: KJG	Checked: JRM	Approved: JHB	Date: 06/02/14	Scale: 1:4	Sheet: 1 of 2

T&S BRASS AND BRONZE WORKS, INC.
2 Saddleback Cove / P.O. Box 1088
Travelers Rest, SC 29690

Travelers Rest, SC: 800-476-4103 • Simi Valley, CA: 800-423-0150 • Fax: 864-834-3518 • www.tsbrass.com

Model No.
B-0665-BSTP

Item No.

ITEM NO.	SALES NO.	DESCRIPTION
1	009545-40	Spout w/ Male GH Outlet & Upper Clevis - Polished Chrome
2	009546-40	Upper Support Rod
3	B-0969	1/2" NPT Vacuum Breaker
4	002534-25	Close Nipple, 1/2" NPT
5	001661-45	Red Index-HW
6	000922-45	Lever Handle Screw
7	001660-45	Blue Index-CW
8	002711-40	Eterna Cartridge, LTC w/ Spring Check, Handle, Index & Screw
9	00AA	1/2" NPT Female Eccentric Flange
10	001019-45	Coupling Nut Washer
11	012442-40	Eterna Cartridge, LTC w/ Spring Check
12	163A	Built-in Service Stop
13	002712-40	Eterna Cartridge, RTC w/ Spring Check, Handle, Index & Screw
14	012443-40	Eterna Cartridge, RTC w/ Spring Check
15	001638-45	Lever Handle

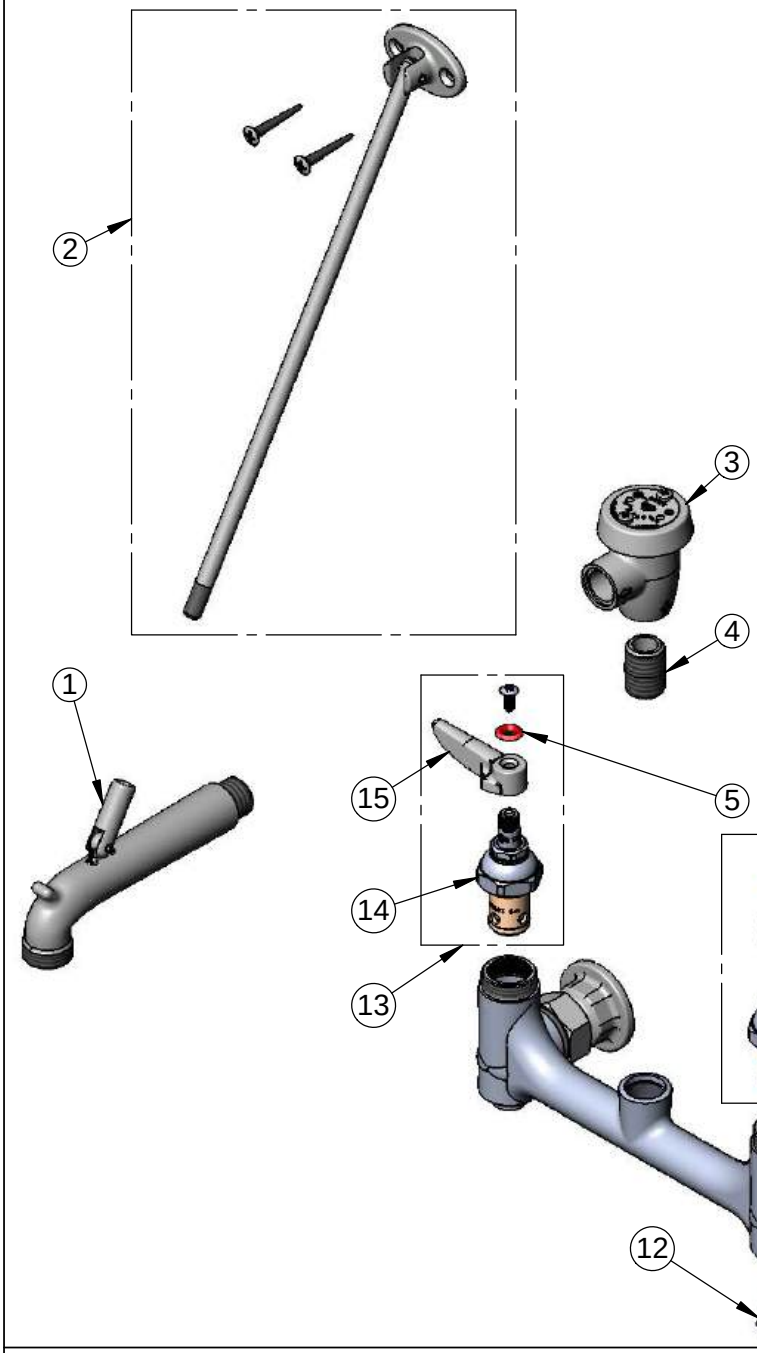

Product Specifications:
8" Wall Mount Service Sink, Eterna Cartridges w/ Spring Checks, Lever Handles, Upper Support Rod, Built-In Stops, Garden Hose Male Outlet, Polished Chrome Finish, 1/2" NPT Vacuum Breaker & 1/2" NPT Female Inlets

Product Compliance:
ASME A112.18.1 / CSA B125.1
NSF 61 Exempt (Non-Potable)
ANSI A117.1 (ADA)
ASSE 1001 (VB)

Drawn: KJG	Checked: JRM	Approved: JHB	Date: 06/02/14	Scale: NTS	Sheet: 2 of 2

CMA
RESTAURANT SUPPLY & DESIGN, INC.

Submittal Sheet

04/21/2026

ITEM# 62 - SHELVING, WALL MOUNTED (1 EA REQ'D)

John Boos PB-MSS824-X

Utility Shelf, wall-mounted, 24"W x 8"D, Stallion Safety Edge front, 1-1/2" riser on sides & rear, includes hooks & (2) mop/broom holder with locking cam, 16/300 stainless steel, KD (Available in Effingham)

SPEC SHEET

"PB-MSS" UTILITY SHELVES - WALL MOUNTED

w/1½" Riser On Rear & Sides

FEATURES:

- 16GA, Type 300 Stainless Steel With #4 Polish, Satin Finish
- Finished With A Safety Stallion Front Edge
- 1-1/2" Riser Turned Up Backsplash On Rear & Sides
- Includes Hooks & Mop/Broom Holders With Locking Cam
- Shipped Knocked-Down, Easy-To-Assemble

SPECIFICATIONS:

- Stainless Steel Shelves Are TIG Welded
- Exposed Welds Are Polished To Match Adjacent Surface
- Shelf: 16GA, Type 300 Stainless Steel #4 Polish, Satin Finish
- Brackets: 16GA, Type 300 Stainless Steel #4 Polish, Satin Finish



PB-MSS824



MOP/BROOM HOLDER

"PB-MSS" UTILITY SHELVES

MODEL	# OF MOP HOLDERS INCLUDED	SIZE (LXWXH)	WEIGHT (LBS)
PB-MSS824	2	24"x8"x7-1/2"	10
PB-MSS836	3	36"x8"x7-1/2"	15

ALL DIMENSIONS ARE TYPICAL. TOLERANCE +/- .500". JOHN BOOS & CO. RESERVES THE RIGHT TO CHANGE SPECIFICATIONS WITHOUT NOTICE.

DETAILED SPECIFICATIONS

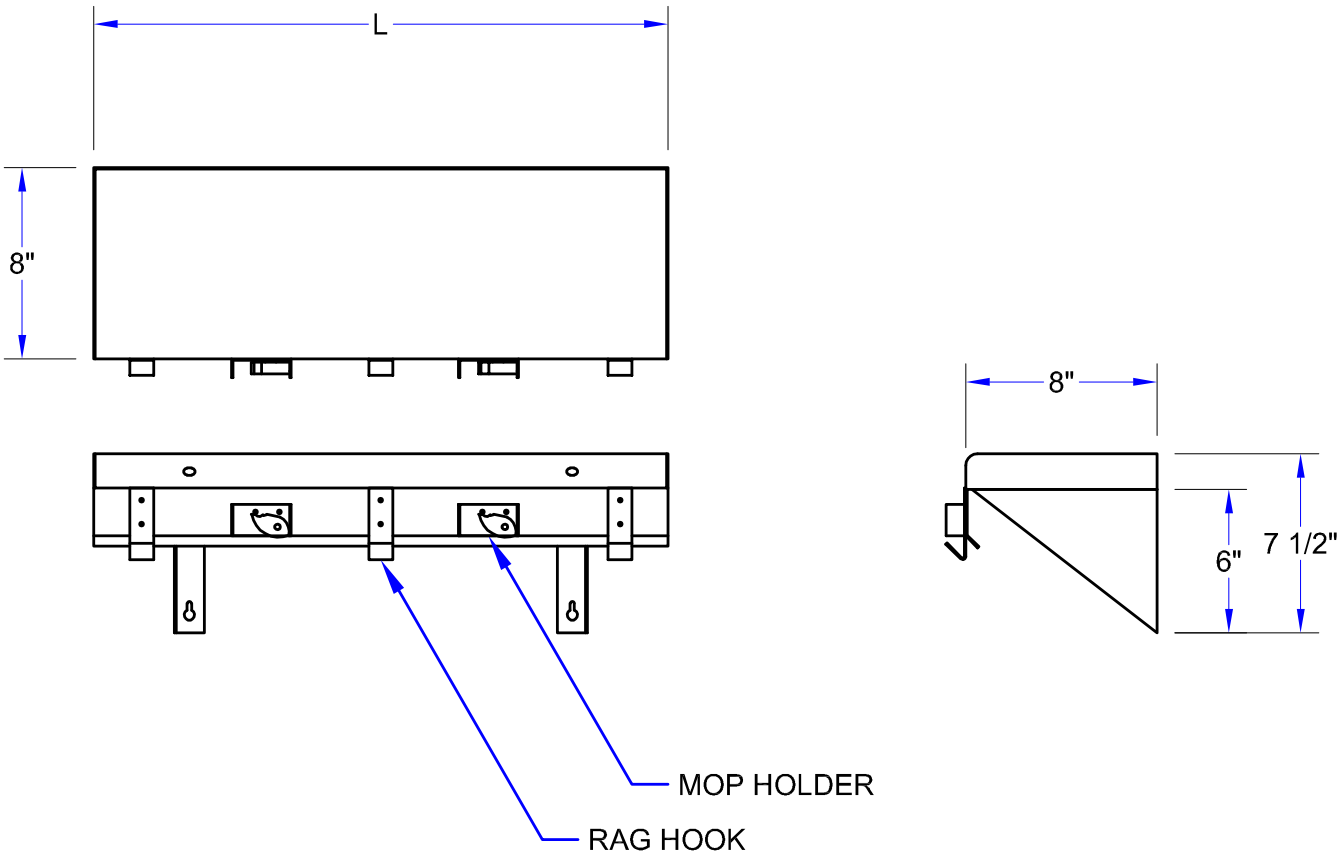

"PB-MSS" UTILITY SHELVES

MODEL	# OF MOP HOLDERS INCLUDED	SIZE (LXWXH)	WEIGHT (LBS)
PB-MSS824	2	24"x8"x7-1/2"	10
PB-MSS836	3	36"x8"x7-1/2"	15

ALL DIMENSIONS ARE TYPICAL. TOLERANCE +/- .500". JOHN BOOS & CO. RESERVES THE RIGHT TO CHANGE SPECIFICATIONS WITHOUT NOTICE.

CMA
RESTAURANT SUPPLY & DESIGN, INC.

Submittal Sheet

04/21/2026

ITEM# 63 - SS WALL FLASHIN (1 EA REQ'D)

Pacific Stainless

Stainless steel fluted wall flashing to go from the top of the mop sink to +60" where sink abuts walls

Description: SS wall flashin

Notes: Stainless steel fluted wall flashing to go from the top of the mop sink to +60" where sink abuts walls

CMA
RESTAURANT SUPPLY & DESIGN, INC.

Submittal Sheet

04/21/2026

ITEM# 64 - SHELVING UNIT, WITH METAL POST (1 EA REQ'D)

Metro PR-213074K3-S-4

Super Erecta Pro® Starter Unit, 21"W x 30"D x 74"H, (4) corrosion resistant shelves with removable polymer shelf mats, (4) bags of split sleeves, (4) posts, NSF

The spec sheet for this item can be viewed on item 5)

CMA RESTAURANT SUPPLY & DESIGN, INC.

Submittal Sheet

04/21/2026

ITEM# 65 - SOILED DISHTABLE (1 EA REQ'D)

Pacific Stainless CUSTOM

Dishtable, soiled, left-to-right, 36"W x 30"D, 16/304 stainless steel construction, (C10) 2"D x 10"H backsplash, 20"W x 20"D x 7"deep pre-rinse sink, 220° sanitary rolled rim, 1-5/8" stainless steel H-Frame legs with stainless steel adjustable feet, left hand unit, NSF, Made in USA

ACCESSORIES

Mfr	Qty	Model	Spec
Pacific Stainless	1	SSRS2020	Stainless Steel Rack Slide, Made in USA
Pacific Stainless	1	SSB2020	Stainless Steel Scrap Basket, Made in USA

Description: Soiled Dishtable

Notes: Dishtable, soiled, left-to-right, 36"W x 30"D, 16/304 stainless steel construction, (C10) 2"D x 10"H backsplash, 20"W x 20"D x 7"deep pre-rinse sink, 220° sanitary rolled rim, 1-5/8" stainless steel H-Frame legs with stainless steel adjustable feet, left hand unit, NSF, Made in USA

CMA
RESTAURANT SUPPLY & DESIGN, INC.

Submittal Sheet

04/21/2026

ITEM# 66 - PRE-RINSE FAUCET ASSEMBLY (1 EA REQ'D)

T&S Brass B-0133

EasyInstall Pre-Rinse Unit, wall mount mixing faucet with 8" adjustable centers, quarter-turn Eterna cartridges with spring checks, lever handles with color-coded indexes, 18" EasyInstall riser, 44" flexible stainless steel hose with heat-resistant gray handle & hold down ring, 1.15 GPM spray valve (B-0107), finger hook, polished chrome-plated brass faucet body, 1/2" NPT female inlets, CSA

ACCESSORIES

Mfr	Qty	Model	Spec
T&S Brass	1	B-0230-KIT	Inlet Kit, 1/2" NPT nipple, close elbows, 24" flex supply hoses

T&S BRASS AND BRONZE WORKS, INC.
2 Saddleback Cove / P.O. Box 1088
Travelers Rest, SC 29690

Travelers Rest, SC: 800-476-4103 • Simi Valley, CA: 800-423-0150 • Fax: 864-834-3518 • www.tsbrass.com

Model No. **B-0133**

Item No.

This Space for Architect/Engineer Approval

Job Name_____Date_____

Model Specified_____ Quantity_____

Customer/Wholesaler_____

Contractor_____

Architect/Engineer_____

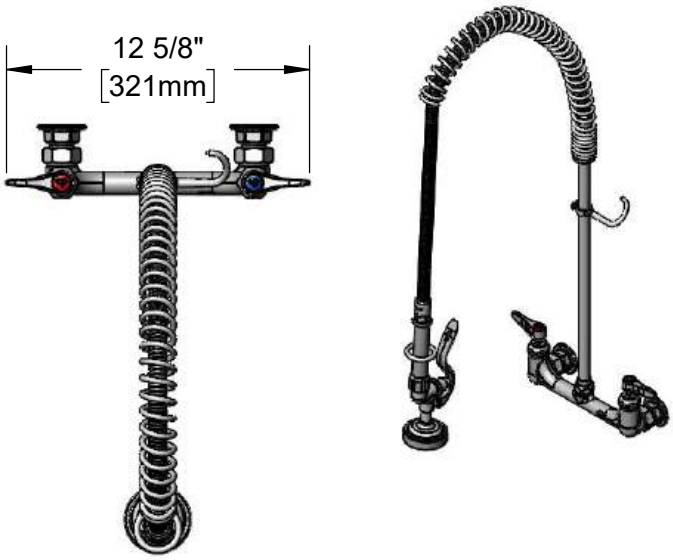

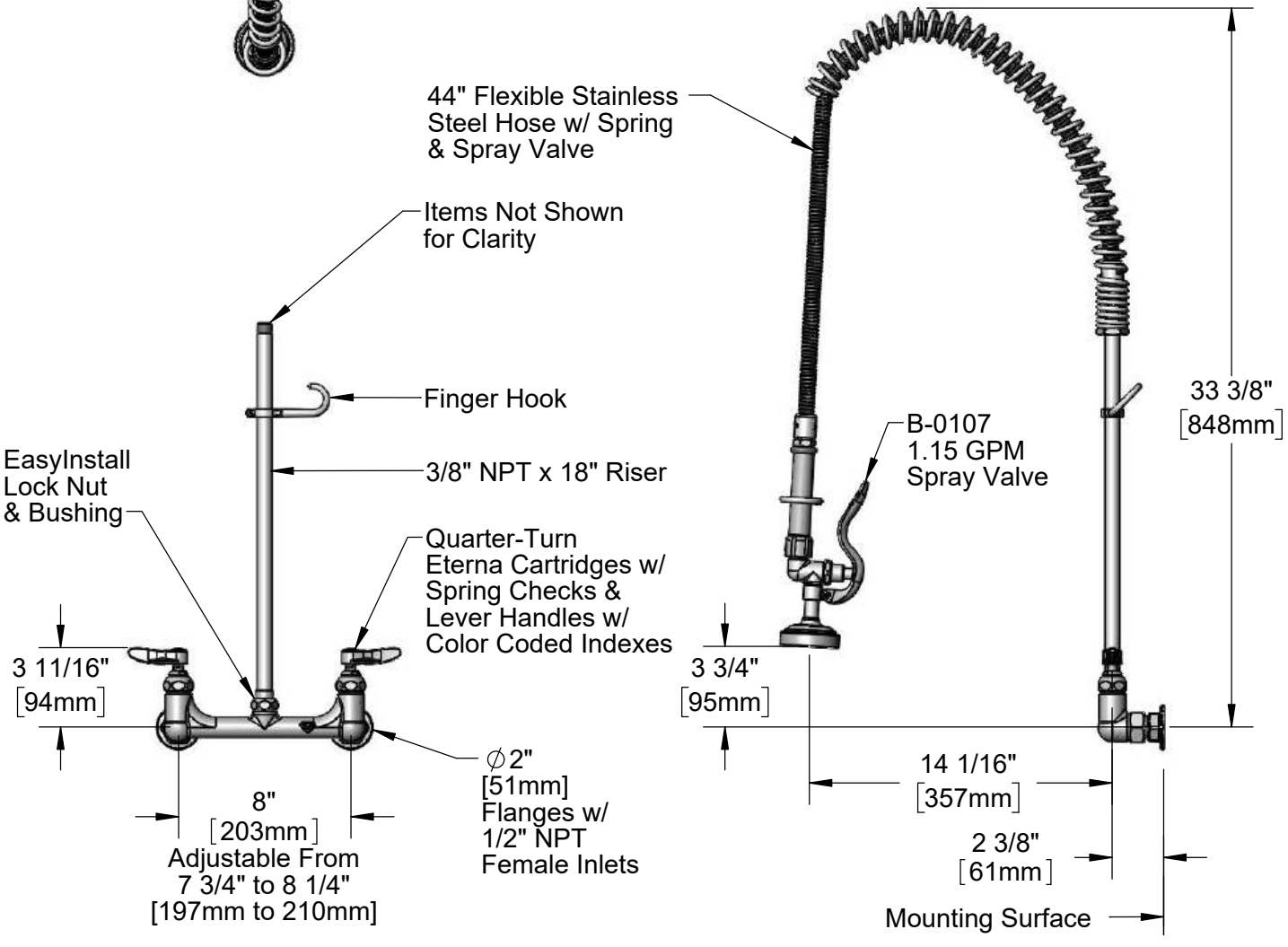

Product Specifications:

Pre-Rinse Unit: EasyInstall 8" Wall Mount Mixing Faucet, Quarter-Turn Eterna Cartridges w/ Spring Checks, Lever Handles, 44" Flexible Stainless Steel Hose, 1.15 GPM Spray Valve & 1/2" NPT Female Inlets

Product Compliance:

ASME A112.18.1 / CSA B125.1
NSF 61 - Section 9
NSF 372 (Low Lead Content)
2019 DOE PRSV - Class II

Drawn: MRC	Checked: JRM	Approved: JHB	Date: 06/18/20	Scale: 1:8	Sheet: 1 of 2

T&S BRASS AND BRONZE WORKS, INC.
2 Saddleback Cove / P.O. Box 1088
Travelers Rest, SC 29690

Travelers Rest, SC: 800-476-4103 • Simi Valley, CA: 800-423-0150 • Fax: 864-834-3518 • www.tsbrass.com

Model No. **B-0133**

Item No.

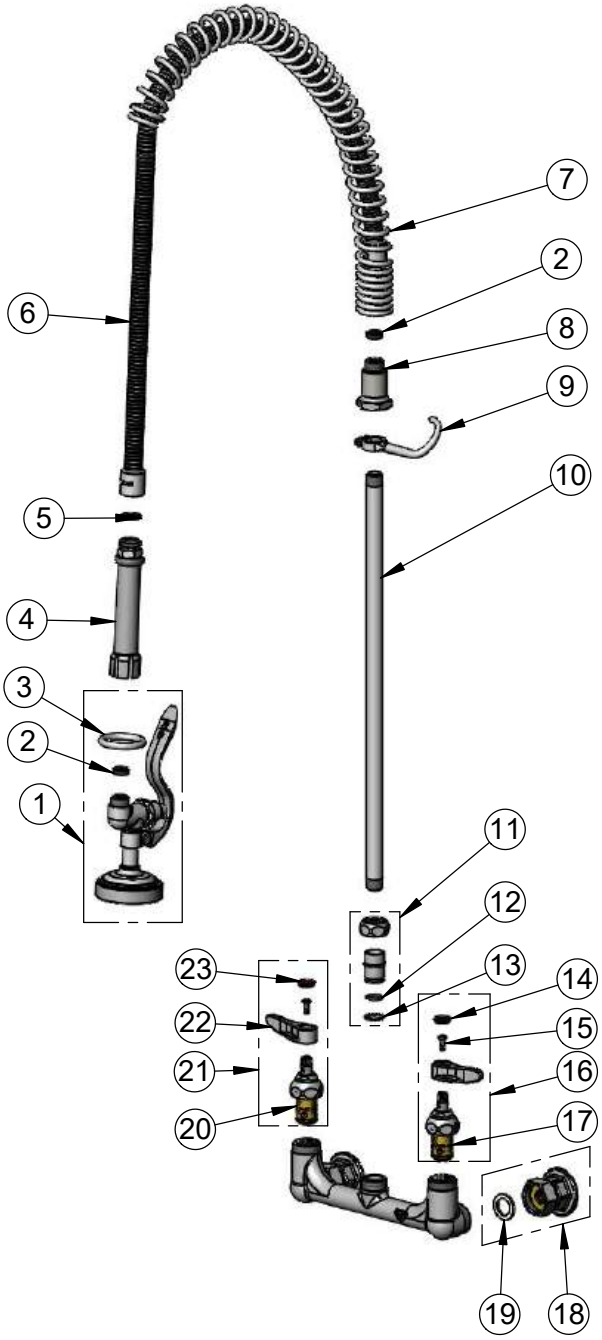

ITEM NO.	SALES NO.	DESCRIPTION
1	B-0107	1.15 GPM Spray Valve
2	010476-45	#27 Washer
3	000907-45	Spray Valve Hold Down Ring
4	002987-40	Grip Handle
5	001014-45	Washer, B-0100 Hose Barrel
6	B-0044-H2A	44" Stainless Steel Flexible Hose, Less Handle
7	000888-45	EasyInstall Overhead Spring
8	000821-40	Spring Body
9	004R	Finger Hook
10	000369-40	3/8" NPT x 18" Riser
11	EZ-K	EasyInstall Kit
12	001065-45	O-Ring
13	014200-45	Star Washer, Anti-Rotation
14	018506-19NS	Blue Button Index, Press-in
15	000925-45	Lab Handle Screw
16	002711-40NS	Quarter-Turn Eterna Cartridge w/ Spring Check, Handle, Blue Index & Screw, LTC
17	012442-40NS	Quarter-Turn Eterna Cartridge w/ Spring Check, LTC
18	00AA	1/2" NPT Female Eccentric Flange
19	001019-45	Coupling Nut Washer
20	012443-40NS	Quarter-Turn Eterna Cartridge w/ Spring Check, RTC
21	002712-40NS	Quarter-Turn Eterna Cartridge w/ Spring Check, Handle, Red Index & Screw, RTC
22	001638-45NS	Lever Handle (New Style)
23	001193-19NS	Red Button Index, Press-in

Product Specifications:
Pre-Rinse Unit: EasyInstall 8" Wall Mount Mixing Faucet, Quarter-Turn Eterna Cartridges w/ Spring Checks, Lever Handles, 44" Flexible Stainless Steel Hose, 1.15 GPM Spray Valve & 1/2" NPT Female Inlets

Product Compliance:
ASME A112.18.1 / CSA B125.1
NSF 61 - Section 9
NSF 372 (Low Lead Content)
2019 DOE PRSV - Class II

Drawn:	Checked:	Approved:	Date:	Scale:	Sheet:
MRC	JRM	JHB	06/18/20	NTS	2 of 2

CMA
RESTAURANT SUPPLY & DESIGN, INC.

Submittal Sheet

04/21/2026

ITEM# 67 - SS FLUTED WALL FLASHING (1 EA REQ'D)

Pacific Stainless

Stainless steel wall flashing to go from the top of the dish tables backsplash to +48" above the splash.

Description: SS fluted wall flashing

Notes: Stainless steel wall flashing to go from the top of the dish tables backsplash to +48" above the splash.

CMA
RESTAURANT SUPPLY & DESIGN, INC.

Submittal Sheet

04/21/2026

ITEM# 68 - SPARE NO.

<Spare No.>

Description: Spare No.

Notes:

CMA
RESTAURANT SUPPLY & DESIGN, INC.

Submittal Sheet

04/21/2026

ITEM# 69 - SPARE NO.

<Spare No.>

Description: Spare No.

Notes:

CMA RESTAURANT SUPPLY & DESIGN, INC.

Submittal Sheet

04/21/2026

ITEM# 70 - DISHWASHER, DOOR TYPE (1 EA REQ'D)

Jackson WWS CONSERVER XL-E-FL

Conserver® Dishwasher, Front Loading Door Type, 25-1/4"W x 30-5/16"D x 68-1/2"H, low temperature chemical sanitizing, approximately (30) racks/hour, electronic timer, (3) built-in dispensing pumps, built-in scrap accumulator, removable screen, auto-start, stainless steel construction, 3" adjustable stainless steel bullet feet, 1 HP wash pump, cETLus, ETL Sanitation, ENERGY STAR®

ACCESSORIES

Mfr	Qty	Model	Spec
Jackson WWS	1		1 year parts & labor warranty, continental USA, standard
Jackson WWS	1		115V/60/1-ph, 10.0 amps, std.
Jackson WWS	1	04820-100-04-07	Pressure Regulator, 1/2"
Jackson WWS	1	05700-002-64-67	Water Hammer Arrestor, 1/2"

Jackson
Warewashing Systems

Project _____
Item _____
Quantity _____
CSI Section 11400

Conserver® XL-E-FL

Front-loading Low Temperature
Chemical Sanitizing Door-type



Standard Features

- Front-loading design is perfect for applications with limited space - no dish tables required!
- Fill and Dump design disposes of dirty water, replacing it with a fresh water rinse every cycle
- Electronic timer
- Internal sump design
- Delime mode for easy removal of hard water deposits
- Door-actuated start
- Convenient top mounted controls
- 17 15/16" (456 mm) vertical inside clearance
- Interchangeable upper and lower stainless steel wash/rinse arms
- Door switch
- Self-draining stainless steel pump eliminates soil/detergent carryover between wash and rinse cycles
- Built-in waste accumulator
- Removable scrap screen
- Built-in chemical pumps and priming switches
- Air gap instead of vacuum breaker
- Low chemical indicator lights
- Wash thermometer
- Single point electrical connection
- Adjustable stainless steel bullet feet, with rear flanged feet
- Durable stainless steel construction

Specification Statement

Specified unit will be a Jackson Conserver XL-E-FL front-loading low temperature chemical sanitizing door-type dishwasher, rated to NSF/ANSI Standard 3 by ETL Sanitation. Unit will be ENERGY STAR® certified. Unit to be rated for 41 racks per hour, 1.02 gallons per rack, and will include an electronic timer and an internal sump. Other features include a 17 5/16 inch vertical inside clearance, interchangeable wash/rinse arms, 1 HP self-draining stainless steel wash pump, built-in chemical pumps and priming switches, delime mode, low chemical indicator lights and built-in waste accumulator. Constructed of durable stainless steel with adjustable bullet feet.

1-year parts and labor warranty.

Options & Accessories

- 230V Electrical
- Water Hammer Arrestor
- Flanged Feet
- Audible Low Product Alarm (available only on 115v models)
- Scaltrol
- Replacement Cartridge for Scaltrol
- 36-Compartment Rack
  4-1/8" tall (105 mm)
  5-5/8" tall (143 mm)
  7" tall (178 mm)
- Combination Rack
- Peg Rack

Intertek Intertek ENERGY STAR

Conserver® XL-E-FL

Conserver® XL-E-FL

Jackson Warewashing Systems

Meet The Conserver Family of Products

Jackson's family of Conserver products offers a solution for every application. These low temp, chemical sanitizing door-type dishwashers provide robust cleaning power to get dishes *Clean the First Time*®! The fill and dump design disposes of dirty wash water, replacing it with a fresh water rinse every cycle, while the self-draining stainless steel pump eliminates soil/detergent carryover between the wash and rinse cycles. The internal sump saves space and provides a more aesthetic appeal to the product. Built-in chemical pumps come standard on all Conserver products, and a low product indicator light alerts the user whenever the machine runs out of chemical product. Find your Conserver at www.jacksonwws.com.



Conserver XL-E



Conserver XL-E-LTH



Conserver XL-E-FL



Conserver XL-HH



Conserver XL2

Jackson Warewashing Systems

Conserver® XL-E-FL

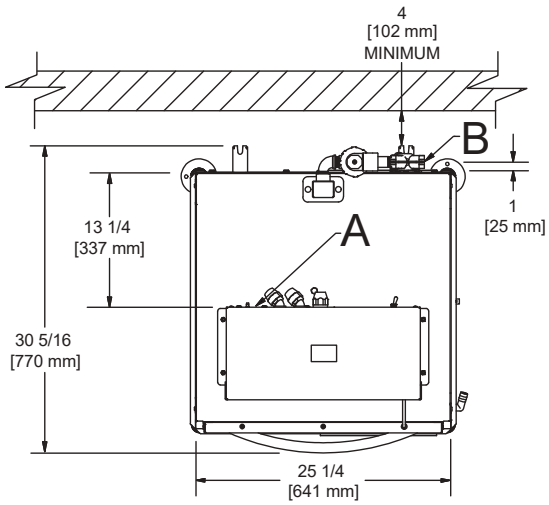

LEGEND
A - Electrical Connection (1 1/8” Hole)
B - Water Inlet (1/2” NPT)
C - Drain Connection (2” NPT)
D - Chemical Connection (7/8” Hole)

All dimensions from the floor can be increased 1 1/8” using the machine’s adjustable feet.

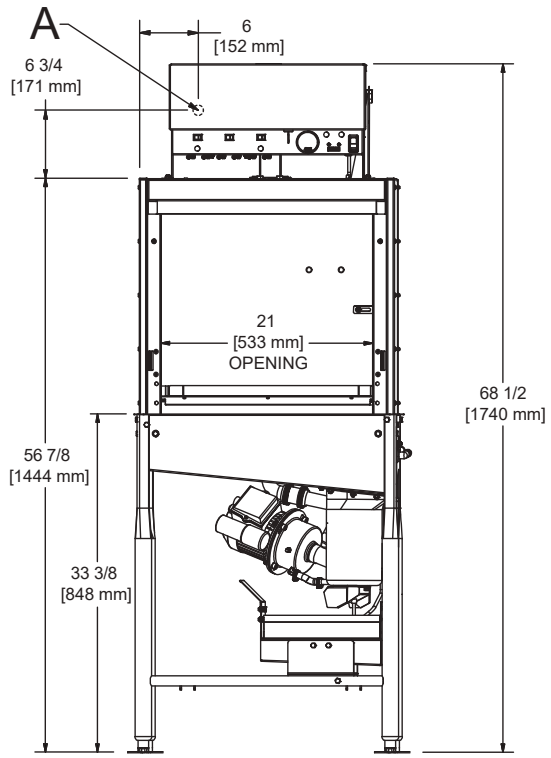

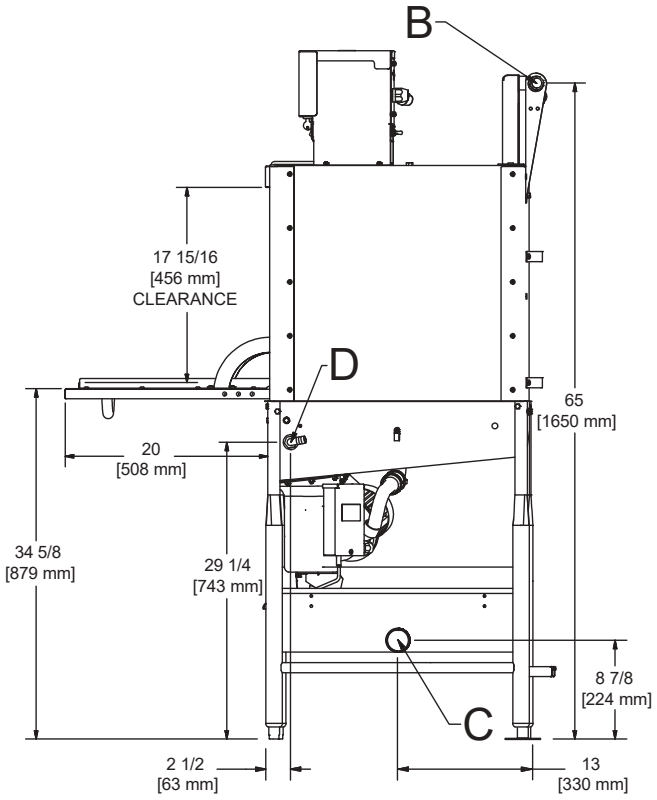

Conserver® XL-E-FL

Jackson® Warewashing Systems

Conserver® XL-E-FL

Front-loading Low Temperature Chemical Sanitizing Door-type

Operating Capacity

Racks per Hour	41 (30)*
Dishes per Hour	1025
Glasses per Hour	1476

Operating Temperature

Wash Temperature	
Minimum	120 °F (49 °C)
Recommended	140 °F (60 °C)
Rinse Temperature	
Minimum	120 °F (49 °C)
Recommended	140 °F (60 °C)

Operating Cycle (seconds)

	Wash	Rinse	Dwell	Total Cycle
Normal	42	25	20	87

Water Consumption

Gallons per Rack	1.02 (3.9 L)
Gallons per Hour	41.82 (158.3 L)
Gallons per Hour**	30.60 (115.8 L)
Wash Tank Capacity (gallons)	1.02 (3.9 L)

Water Requirements

Incoming Water Temperature	
Minimum	120 °F (49 °C)
Recommended	140 °F (60 °C)
Flow Pressure (PSI)	20 ± 5
Incoming Water Connection (NPT)	1/2"
Drain Connection (NPT)	2"

Electrical Specifications

Wash Pump Motor (HP)	1

Power Supply	Total Load	Minimum Circuit Ampacity	Maximum Overcurrent Protection
115/60/1	10.0 A	12.5 A	20.0 A
230/60/1	5.0 A	6.3 A	15.0 A

Dimensions

Width	25 1/4" (641 mm)
Depth	30 5/16" (770 mm)
Depth with Door Open	68 1/2" (1740 mm)
Height	47 7/8" (1216 mm)
Inside Clearance Height	17 15/16" (456 mm)
Wall Clearance	4" (102 mm)
Drain Height	8 7/8" (225 mm)
Weight	215 lbs (98 kg)

Shipping Details

Shipping Weight	240 lbs (109 kg)
Shipping Width	33" (838 mm)
Shipping Depth	42" (1067 mm)
Shipping Height	72 1/2" (1842 mm)
Shipping Cube	58.15 cu ft
Shipping Class	300

Advisory: Jackson WWS, Inc. DOES NOT endorse "Tankless On-Demand" water heaters for use with our dishmachines. Jackson WWS, Inc. DOES endorse, and highly recommends, standard "tank" style water heaters, sized to properly handle the water heating requirements of the facility.

**Racks per hour calculated with NSF suggested load time of :30 for front opening dishmachines.*

***Gallons per hour calculated with NSF suggested load time of :30 for front opening dishmachines.*

Contact Jackson

07610-004-78-56 [03/30/23]

Address
6209 N U.S. Highway 25E
Gray, Kentucky 40734

Telephone & Fax
T 888.800.5672
F 606.523.1799

Email
customer.service@jacksonwws.com

JACKSONWWS.COM JACKSON WAREWASHING SYSTEMS JACKSON WWS

We reserve the right to change specifications in this document without incurring any obligation for equipment previously or subsequently sold.

©2023 Jackson WWS, Inc. except where explicitly stated otherwise. All rights reserved.

CMA
RESTAURANT SUPPLY & DESIGN, INC.

Submittal Sheet

04/21/2026

ITEM# 71 - DISHTABLE, WITH POTSINKS (1 EA REQ'D)

Pacific Stainless CUSTOM

Clean Dishtable/Three Compartment Sink, right-to-left, 96" x 30", 16/304 stainless steel construction, (C10) 2"D x 10"H backsplash, 16" x 24" sinks, 220° sanitary rolled rim, right hand unit, NSF, Made in USA

Description: Dishtable, with Potsinks

Notes: Clean Dishtable/Three Compartment Sink, right-to-left, 96" x 30", 16/304 stainless steel construction, (C10) 2"D x 10"H backsplash, 16" x 24" sinks, 220° sanitary rolled rim, right hand unit, NSF, Made in USA

CMA
RESTAURANT SUPPLY & DESIGN, INC.

Submittal Sheet

04/21/2026

ITEM# 72 - WALL / SPLASH MOUNT FAUCET (1 EA REQ'D)

T&S Brass B-0231

Sink Mixing Faucet, wall mount, 8" centers, 12" swing nozzle, lever handles, quarter-turn Eterna cartridges, 1/2" NPT female inlets, low lead, ADA Compliant

The spec sheet for this item can be viewed on item 42)

ACCESSORIES

Mfr	Qty	Model	Spec
T&S Brass	1	B-0230-KIT	Inlet Kit, 1/2" NPT nipple, close elbows, 24" flex supply hoses

CMA RESTAURANT SUPPLY & DESIGN, INC.

Submittal Sheet

04/21/2026

ITEM# 73 - WALL MOUNT SHELF UNIT (1 EA REQ'D)

Quantum XXX

Wire wall shelving, three levels high, (1) 18" deep and (2) 14" deep. To include the following components

ACCESSORIES

Mfr	Qty	Model	Spec
Quantum	3	SG-U44GY	44in UPRIGHT GRAY EPOXY
Quantum	4	SG-CS14GY	Store Grid Shelf Support Bracket, single, for use with 14"W shelves, grey epoxy antimicrobial finish, NSF
Quantum	2	SG-CS18GY	Store Grid Shelf Support Bracket, single, for use with 18"W shelves, grey epoxy antimicrobial finish, NSF
Quantum	2	SG-CD14GY	Store Grid Shelf Support Bracket, double, for use with 14"W shelves, grey epoxy antimicrobial finish, NSF
Quantum	1	SG-CD18GY	Store Grid Shelf Support Bracket, double, for use with 18"W shelves, grey epoxy antimicrobial finish, NSF
Olympic	4	J1442G	Shelf, wire, 14" x 42", chromate with Olympic Gray-Guard™ epoxy finish, NSF
Olympic	2	J1842G	Shelf, wire, 18" x 42", chromate with Olympic Gray-Guard™ epoxy finish, NSF
Olympic	2		1 year warranty against manufacturing defects
Olympic	2		7 year warranty against rust and corrosion

CMA
RESTAURANT SUPPLY & DESIGN, INC.

Submittal Sheet

04/21/2026

ITEM# 74 - SHELVING UNIT (2 EA REQ'D)

Metro PR-244874K3-S-4

Super Erecta Pro® Starter Unit, 24"W x 48"D x 74"H, (4) corrosion resistant shelves with removable polymer shelf mats, (4) bags of split sleeves, (4) posts, NSF

The spec sheet for this item can be viewed on item 5)

CMA
RESTAURANT SUPPLY & DESIGN, INC.

Submittal Sheet

04/21/2026

ITEM# 75 - SPARE NO.

<Spare No.>

Description: Spare No.

Notes:

CMA
RESTAURANT SUPPLY & DESIGN, INC.

Submittal Sheet

04/21/2026

ITEM# 76 - SPARE NO.

<Spare No.>

Description: Spare No.

Notes:

CMA
RESTAURANT SUPPLY & DESIGN, INC.

Submittal Sheet

04/21/2026

ITEM# 77 - CLASS 1 EXHAUST HOOD (1 EA REQ'D)

Greenhck

SEE HOOD SHOP DRAWINGS FOR SPECS

<Incomplete>

GREENHECK
Building Value in Air.

Cut Sheet - Not for Submittal
Printed Date: 04/07/2026
Mark: KH-1
Model: GXEW-213.00-S

GXEW

Type 1, X-Tractor (Spark Arrestor Incl.) Filter Single Wall - Exhaust Only Wall Canopy

Model	Hood Length (in.)	Width (in.)	Bottom Width (in.)	Height (in.)		Exhaust Volume (CFM)	Exhaust SP (in. w.g.)	Double Island
				Front	Back			
GXEW	213	60	60	24	24	4172	0.613	No

Selected Options & Accessories:

Option or Accessory	Description
Mounting Height	80 in. off Finished Floor.
Insulated Top	Listed for Zero Clearance to Combustibles.
Integral Air Space	Factory Mounted on Back - 3" wide Zero Clearance 56 lbs
Non-Integral Air Space	Factory Mounted on Right - 1" wide Zero Clearance Unfinished End
Filter Type	Stainless Steel X-Tractor (Spark Arrestor Incl.) Filters 116 lbs
Continuous Capture	UL listed connection to join multiple sections.

Material: 430 SS Where Exposed
UL Listing: UL 710 w/out Exhaust Fire Damper

Features:
Performance Enhancing Lip (PEL)
Standing Seam Construction for Superior Strength
Stainless Steel Finish for Higher Corrosion Resistance

Hood End Conditions:
Back Wall - Full Combustible
Right Full Wall - Full Combustible

Section Data:

Length (in.)	Volume (CFM)	Exhaust Rate (CFM/FT)	SP (in. wg)	Filter Qty		Filter Ht. (in.)	Cooking Load	Light Qty	Light Type	Foot Candles	Drain Location	Hanging Weight (LBS)
				16" W	20" W							
106.5	1953	220	0.552	4	2	20	Heavy	2	Round LED	63.19	Left/Right	481.07
106.5	2219	250	0.613	4	2	20	Heavy	2	Round LED	63.19	Left/Right	388.74

Exhaust Collar Data:

Collar Num.	Collar Size (LxW) in. or Diameter (in.)		Pos. Off Left (in.)	Pos Off Back (in.)	Velocity (fpm)	Mounting Option
1	18 x 10		53.25	7	1562	Factory Mounted Exhaust Collar(s)
1	21 x 10		53.25	7	1522	Factory Mounted Exhaust Collar(s)

External Supply Plenum Data:

Supply: 3755 CFM **MUA: 3755 CFM** **AC: 0 CFM**

Plenum Num.	Side	Type	Length (in.)	Width (in.)	Height (in.)	Volume (CFM)	Weight (lbs)	SP (in. wg)	Insulated	MBD	LED Lights
1	Front	Air Curtain Supply (ASP)	118.5	18	4	1969	77	0.01	No	Yes	No
2	Front	Air Curtain Supply (ASP)	107.5	18	4	1786	72	0.01	No	Yes	No

External Supply Collar Data:

Section Num.	Plenum Num.	Side	Collar Num.	Collar Shape	Collar Size (LxW) in. or Diameter (in.)	Pos. Off Left (in.)	Pos. Off Front (in.)	Velocity (fpm)	Mounting Option
1	1	Front	1	rectangular	28 x 16	22	9	211	Factory Mounted Supply Collar(s)
1	1	Front	2	rectangular	28 x 16	59.25	9	211	Factory Mounted Supply Collar(s)
1	1	Front	3	rectangular	28 x 16	96.5	9	211	Factory Mounted Supply Collar(s)
2	1	Front	1	rectangular	24 x 16	20	9	223	Factory Mounted Supply Collar(s)
2	1	Front	2	rectangular	24 x 16	53.75	9	223	Factory Mounted Supply Collar(s)
2	1	Front	3	rectangular	24 x 16	87.5	9	223	Factory Mounted Supply Collar(s)

Utility Cabinet Data:

Descripiton	Length (in.)	Width (in.)	Height (in.)	Weight (lbs)
Left Utility Cabinet	60	12	24	90.6

GREENHECK
Building Value in Air.

Cut Sheet - Not for Submittal
Printed Date: 04/07/2026
Mark: KH-1
Model: GXEW-213.00-S

FIRE (PIPING/DROPS/NOZZLES/ETC.) SUBJECT TO CHANGE. AS-BUILT DRAWINGS CAN BE PROVIDED AT TIME OF ORDER AND INCLUDED WITH PRODUCT SHIPMENT

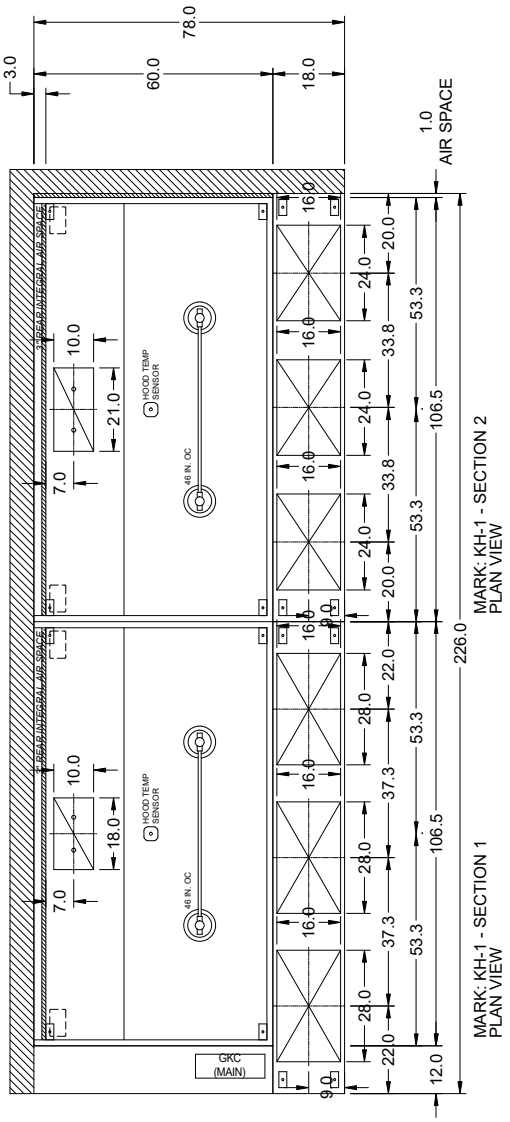

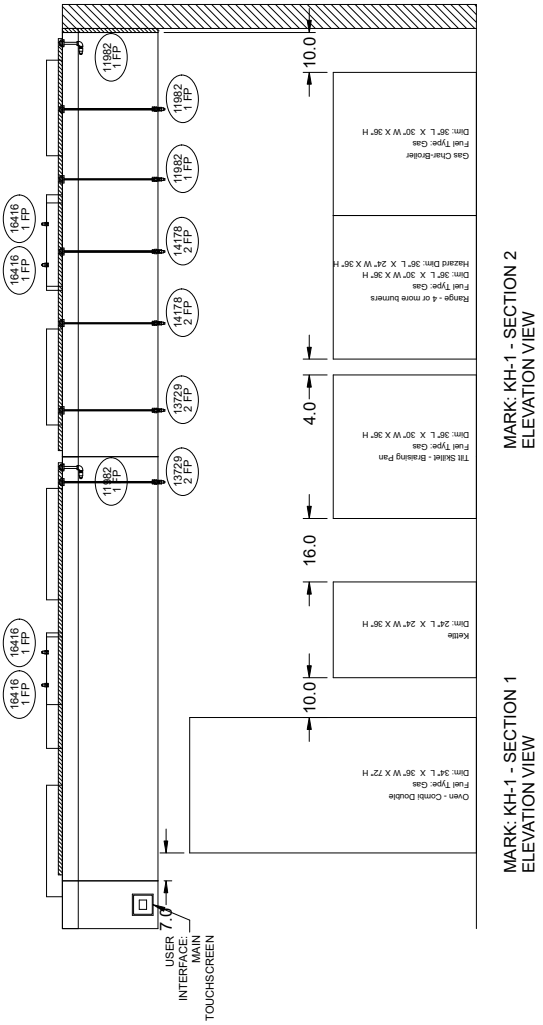

NOTE: All dimensions are in units of in.

GREENHECK
Building Value in Air.

Cut Sheet - Not for Submittal
Printed Date: 04/07/2026
Mark: KH-1
Model: GXEW-213.00-S

Hanger Bracket Locations			
Sec #	Brkt #	Distance Off Left (in)	Distance Off Front (in)
1	1	3.50	2.50
1	2	103.00	2.50
1	3	3.50	56.00
1	4	103.00	56.00
2	1	3.50	2.50
2	2	103.00	2.50
2	3	3.50	56.00
2	4	103.00	56.00

Bracket Mounting Position for a 4 Bracket Hood

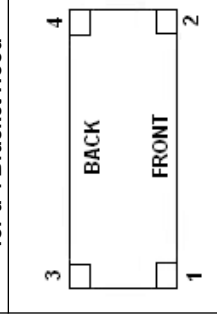

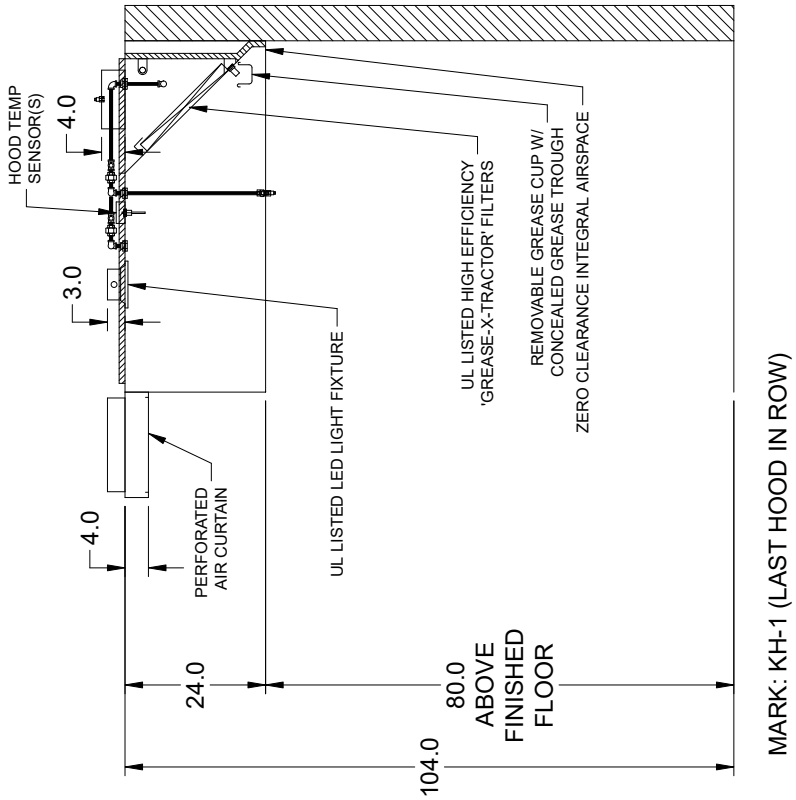

NOTE: All dimensions are in units of in.

Z:\Ryan Stewart\CAP Jobs\ANHC Kitchen - Anchorage.gfcj
Generated by: rstewart@dorse.com

GREENHECK
Building Value in Air.

Cut Sheet - Not for Submittal
Printed Date: 04/07/2026
Mark: FS-1 PRE PIPE ONLY
Model: FSSK - P - 16 - 0

Amerex KP

Wet Chemical Fire Suppression System

Scope:
Pre-Pipe Only: Includes only the piping connected to the hood as well as the detection line. Does not include required field-supplied parts including but not limited to links, cartridges, agent, tanks, any parts needed to complete the hook-up of the system outside of what is directly connected to hood. This also does not include labor, testing, or permits.

Hood Fire Suppression System

Detection Type	Mechanical
Coverage	Appliance Specific
Hood Mark(s) Connected	KH-1 KH-1
Mounting Location	Pre-pipe Only (Includes pre-piped hood with detection. Installation and other field supplied components by others)
System Size	7.5 Gallon
Flow Points	Maximum of 22 and 16 are utilized.

Options and Accessories for Hood Fire System Provided from Factory

Manual Pull Stations	QTY of 0
Microswitch	QTY of 0
Alarm Initiating Switch	QTY of 0
Metal Blow Off Caps	Included

Important Notes

- The manner in which the parts included in the scope of this fire system are supplied may vary. They could be shipped from the fire suppression manufacturer, shipped loose with the hood, connected directly to the hood, or supplied directly to the installing distributor.
- Must maintain 8 inch clearance between top of hood and pipe connections for installation (includes piping and workspace clearance).
- The amount of supply pipe that should not be exceeded per system is 32 ft., which includes all pipe used along the length the hood, between hoods, and the pipe needed to connect to the tanks where they are mounted.
- Pull station locations must be a minimum of 10 ft. and a maximum of 20 ft. from the hoods and in the path of egress. They also must be 40-48 in. from the finished floor.
- Systems are pre-piped for a specific appliance line-up. If appliance types and sizes differ from what is shown on the hood submittal, this may result in a field re-pipe which is outside the scope defined here.

GREENHECK
Building Value in Air.

Cut Sheet - Not for Submittal
Printed Date: 04/07/2026
Mark: GAS VALVE
Model: GAS VALVE

Gas Valve

Quantity: 1
Amerex
Electrical
2 in.
Manual Reset Relay

GREENHECK
Building Value in Air.

Cut Sheet - Not for Submittal
Printed Date: 04/07/2026
Mark: KEF-1
Model: CUE-140-A

Model: CUE-140-A

Direct Drive Upblast Centrifugal Roof Exhaust Fan

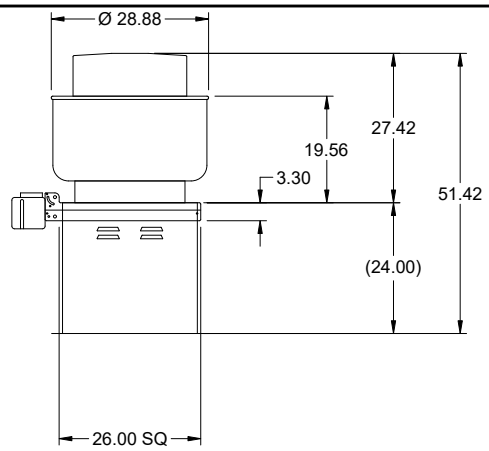

OVERALL HEIGHT MAY BE GREATER DEPENDING ON MOTOR, ADAPTER, AND/OR HINGE BASE.

Dimensional	
Quantity	1
Weight w/o Acc's (lb)	79
Weight w/ Acc's (lb)	96
Weight w/ Acc's and Curb (lb)	129
Max T Motor Frame Size	145
Standard Curb Cap Size (in.)	26 x 26
Roof Opening (in.)	22.5 x 22.5

Performance	
Requested Volume (CFM)	1,953
Actual Volume (CFM)	1,953
Total External SP (in. wg)	0.927
Fan RPM	1464
Operating Power (hp)	0.61
Elevation (ft)	131
Airstream Temp.(F)	70
Air Density (lb/ft3)	0.075
Tip Speed (ft/min)	5,605
Static Eff. (%)	47

Misc Fan Data	
Fan Energy Index (FEI)	1.32
Outlet Velocity (ft/min)	1,135

Motor	
Motor Mounted	Yes
Size (hp)	1
Voltage/Cycle/Phase	460/60/3
Enclosure	ODP
Motor RPM	1725
Efficiency Rating	Standard
Windings	1
NEC FLA* (Amps)	2.1
Min. Circuit Ampacity (MCA)	2.63
Max. Overcurrent Protection (MOP)	15
Short Circuit Current Rtg (SCCR)	5 kA

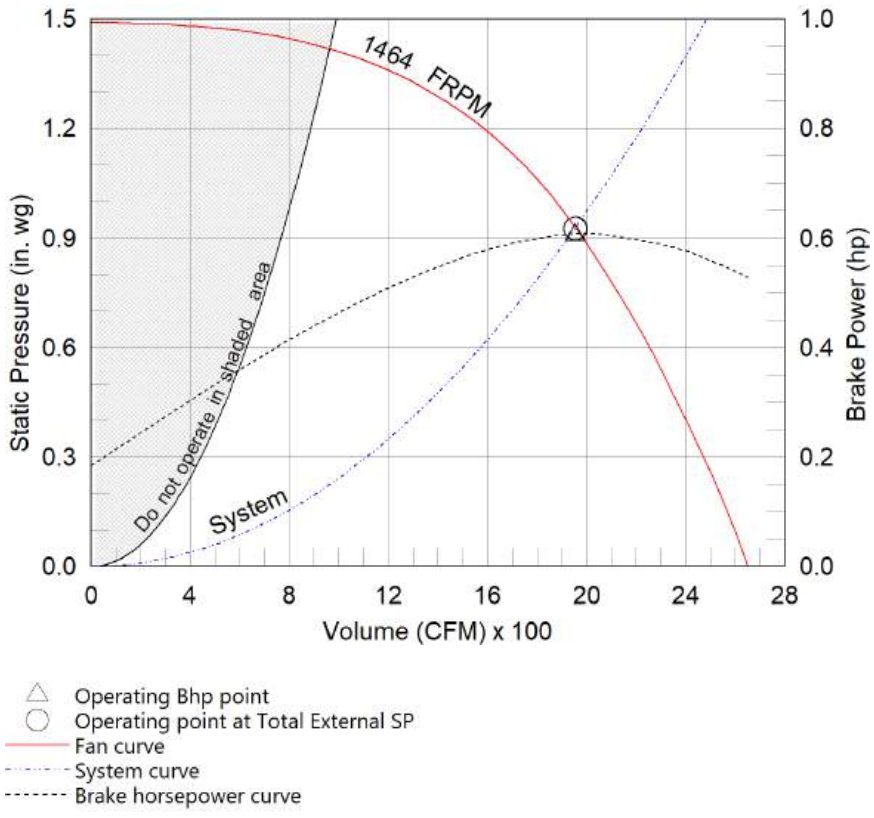

Sound Power by Octave Band

Sound Data	62.5	125	250	500	1000	2000	4000	8000	LwA	dBA	Sones
Inlet	71	74	79	73	66	61	59	55	75	63	12.0

Notes:
All dimensions shown are in units of in.
*NEC FLA, MCA and MOP are for reference only – based on tables 430.248 or 430.25 of National Electric Code 2020. Actual motor FLA may vary, for sizing thermal overload, consult factory. MCA and MOP values shown only account for the motor, not accessories (damper actuator, field supplied VFD, etc).
LwA - A weighted sound power level, based on ANSI S1.4
dBA - A weighted sound pressure level, based on 11.5 dB attenuation per Octave band at 5 ft - dBA levels are not licensed by AMCA International
Sones - calculated using ANSI/AMCA 301 at 5 ft
The motor provided on this fan is inverter ready and meets NEMA MG1 Part 31.4.4.2

GREENHECK
Building Value in Air.

Cut Sheet - Not for Submittal
Printed Date: 04/07/2026
Mark: KEF-1
Model: CUE-140-A

Model: CUE-140-A

Direct Drive Upblast Centrifugal Roof Exhaust Fan

Standard Construction Features:

- Aluminum housing - Backward curved composite (sizes 60-95) or aluminum (sizes 99-300) wheel - Aluminum curb cap with prepunched mounting holes - Drain trough - Ball bearing motors (sizes 85-300 and all Vari Green), sleeve bearing motors (sizes 60-80) - Motor isolated on shock mounts - Corrosion resistant fasteners - Removable power pack - Tool-less hood entry

Selected Options & Accessories:

Motor VFD Rated without Shaft Grounding Protection
Provided motor meets the motor efficiency requirements set forth in ANSI/ ASHRAE/IES Standard 90.1
Curb Cap Size - 26 Square
UL/cUL 705 Listed - Supplement SC - "Power Ventilators for Restaurant Exh. Appliances" (Formerly UL 762)
Switch, NEMA-3R, Toggle,
Junction Box Mounted & Wired
Hinge, Factory Installed
High Temp Curb Seal Rated for Continuous Duty at 1500 F (Factory Attached)
Fastener Material: Stainless
Grease Trap (PN 475538)
Aluminum Wheel Material
Unit Warranty: 1 Yr (Standard)

Selected Sub Marks

See individual submittals for full details
GPFV-26-G24

GREENHECK
Building Value in Air.

Cut Sheet - Not for Submittal
Printed Date: 04/07/2026
Mark: KEF-1
Model: CUE-140-A

CUE-140-A Min/Max Fan Curve

Performance

Requested Volume (CFM)	Actual Volume (CFM)	Total External SP (in. wg)	Fan RPM	Operating Power (hp)
1,953	1,953	0.927	1464	0.61

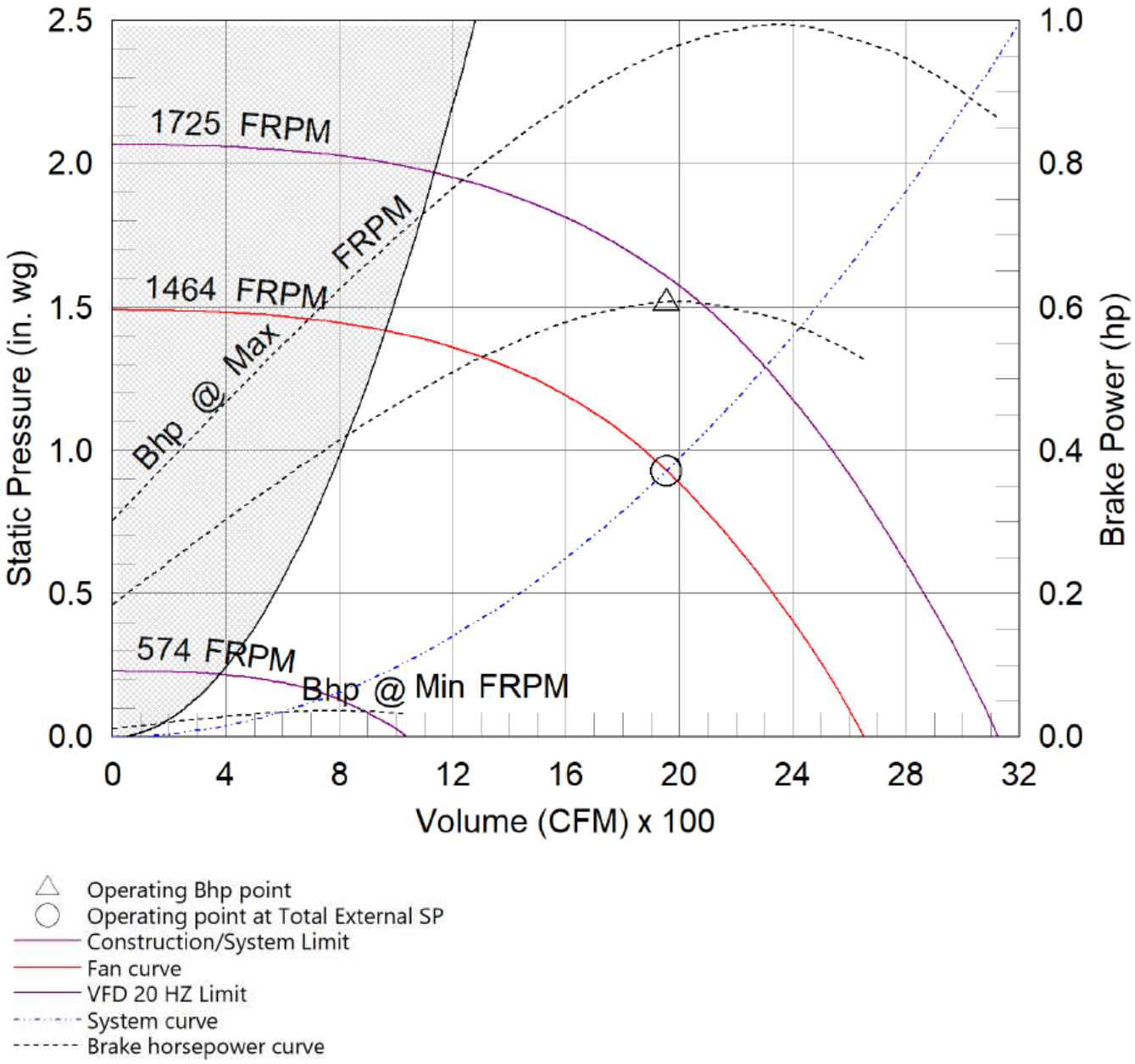

GREENHECK
Building Value in Air.

Cut Sheet - Not for Submittal
Printed Date: 04/07/2026
Mark: KEF-1
Model: GPFV-26-G24

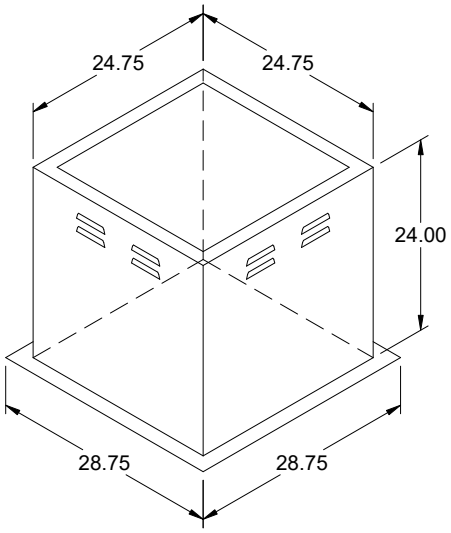

Model: GPFV

Vented Roof Curb

Standard Construction Features:

- Roof Curb fits between the building roof and the fan mounted directly to the roof support structure - Constructed of either 18 ga galvanized steel or 0.064 in. aluminum - Straight Sided without a cant - Includes louvered vents to vent heat - 2 in. or 5 in. mounting flange - Height - Designed to provide required 40 in. minimum discharge height above roof line per NFPA 96 Notes: - The maximum roof opening dimension should not be greater than the "Actual" top outside dimension minus 2 in.. - The minimum roof opening dimension should be at least 2.5 in. more than the damper dimension or recommended duct size. - The Roof Opening Dimension may or may not be the same as the Structural Opening Dimension. - Damper Trays are not available

General

Tag	Qty	Model	Sizing Method	Undersizing (in.)	Weight (lb)	Shipped Assembled	Union Label
KEF-1	1	GPFV-26	Nominal	1.25	33	Yes	No Preference

Dimensions

Curb Height (in.)	Nominal Outside Width (in.)	Nominal Outside Length (in.)	Actual Outside Width (in.)	Actual Outside Length (in.)	Actual Inside Width (in.)	Actual Inside Length (in.)	Flange Width (in.)	Flange Length (in.)	Hinge Base Width* (in.)	Hinge Base Length* (in.)
24	26	26	24.75	24.75	21.25	21.25	28.75	28.75	25	25
*May not be applicable										

Accessories

Material
Galvanized

GREENHECK
Building Value in Air.

Cut Sheet - Not for Submittal
Printed Date: 04/07/2026
Mark: KEF-2
Model: CUE-160-A

Model: CUE-160-A

Direct Drive Upblast Centrifugal Roof Exhaust Fan

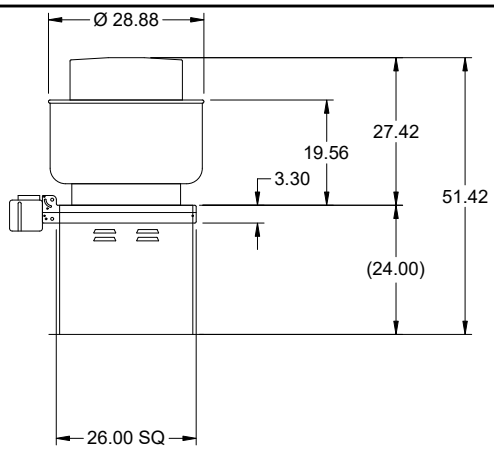

OVERALL HEIGHT MAY BE GREATER DEPENDING ON MOTOR, ADAPTER, AND/OR HINGE BASE.

Dimensional	
Quantity	1
Weight w/o Acc's (lb)	100
Weight w/ Acc's (lb)	117
Weight w/ Acc's and Curb (lb)	150
Max T Motor Frame Size	145
Standard Curb Cap Size (in.)	26 x 26
Roof Opening (in.)	22.5 x 22.5

Performance	
Requested Volume (CFM)	2,219
Actual Volume (CFM)	2,219
Total External SP (in. wg)	0.988
Fan RPM	1180
Operating Power (hp)	0.62
Elevation (ft)	131
Airstream Temp.(F)	70
Air Density (lb/ft3)	0.075
Tip Speed (ft/min)	5,137
Static Eff. (%)	56

Misc Fan Data	
Fan Energy Index (FEI)	1.41
Outlet Velocity (ft/min)	1,290

Motor	
Motor Mounted	Yes
Size (hp)	2
Voltage/Cycle/Phase	460/60/3
Enclosure	ODP
Motor RPM	1725
Efficiency Rating	Standard
Windings	1
NEC FLA* (Amps)	3.4
Min. Circuit Ampacity (MCA)	4.25
Max. Overcurrent Protection (MOP)	15
Short Circuit Current Rtg (SCCR)	5 kA

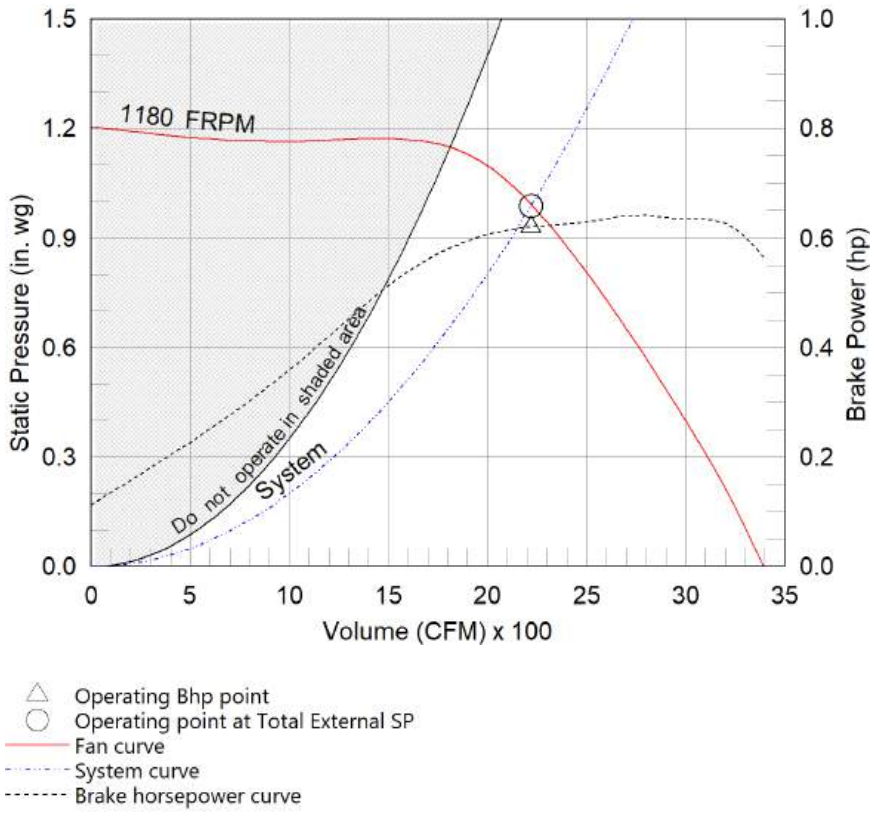

Sound Power by Octave Band

Sound Data	62.5	125	250	500	1000	2000	4000	8000	LwA	dBA	Sones
Inlet	73	80	78	76	70	67	63	60	77	66	13.9

Notes:
All dimensions shown are in units of in.
*NEC FLA, MCA and MOP are for reference only – based on tables 430.248 or 430.25 of National Electric Code 2020. Actual motor FLA may vary, for sizing thermal overload, consult factory. MCA and MOP values shown only account for the motor, not accessories (damper actuator, field supplied VFD, etc).
LwA - A weighted sound power level, based on ANSI S1.4
dBA - A weighted sound pressure level, based on 11.5 dB attenuation per Octave band at 5 ft - dBA levels are not licensed by AMCA International
Sones - calculated using ANSI/AMCA 301 at 5 ft
The motor provided on this fan is inverter ready and meets NEMA MG1 Part 31.4.4.2

GREENHECK
Building Value in Air.

Cut Sheet - Not for Submittal
Printed Date: 04/07/2026
Mark: KEF-2
Model: CUE-160-A

Model: CUE-160-A

Direct Drive Upblast Centrifugal Roof Exhaust Fan

Standard Construction Features:

- Aluminum housing - Backward curved composite (sizes 60-95) or aluminum (sizes 99-300) wheel - Aluminum curb cap with prepunched mounting holes - Drain trough - Ball bearing motors (sizes 85-300 and all Vari Green), sleeve bearing motors (sizes 60-80) - Motor isolated on shock mounts - Corrosion resistant fasteners - Removable power pack - Tool-less hood entry

Selected Options & Accessories:

Motor VFD Rated without Shaft Grounding Protection
Provided motor meets the motor efficiency requirements set forth in ANSI/ ASHRAE/IES Standard 90.1
Curb Cap Size - 26 Square
UL/cUL 705 Listed - Supplement SC - "Power Ventilators for Restaurant Exh. Appliances" (Formerly UL 762)
Switch, NEMA-3R, Toggle,
Junction Box Mounted & Wired
Hinge, Factory Installed
High Temp Curb Seal Rated for Continuous Duty at 1500 F (Factory Attached)
Fastener Material: Stainless
Grease Trap (PN 475538)
Aluminum Wheel Material
Unit Warranty: 1 Yr (Standard)

Selected Sub Marks

See individual submittals for full details
GPFV-26-G24

GREENHECK
Building Value in Air.

Cut Sheet - Not for Submittal
Printed Date: 04/07/2026
Mark: KEF-2
Model: CUE-160-A

CUE-160-A Min/Max Fan Curve

Performance

Requested Volume (CFM)	Actual Volume (CFM)	Total External SP (in. wg)	Fan RPM	Operating Power (hp)
2,219	2,219	0.988	1180	0.62

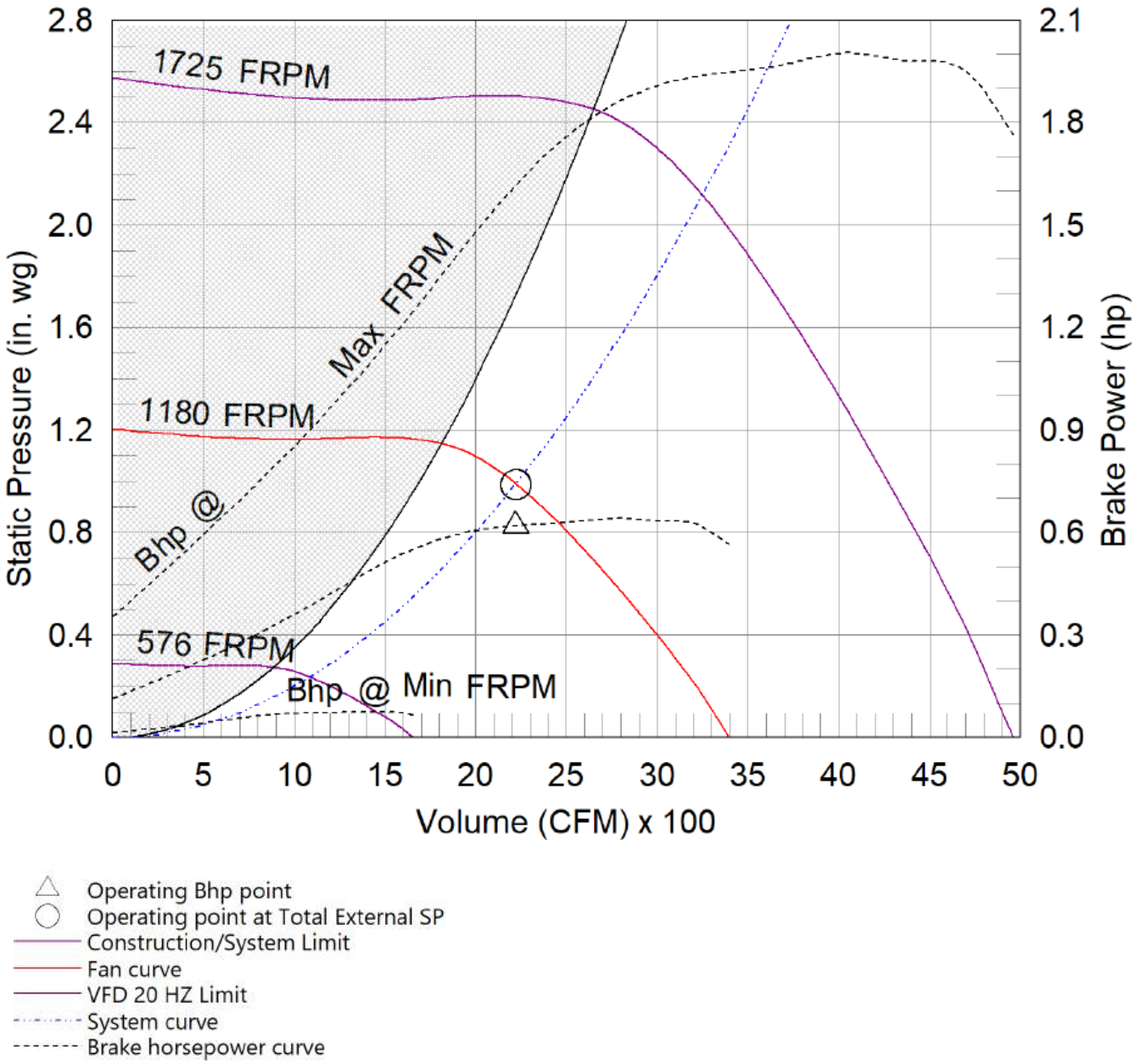

GREENHECK
Building Value in Air.

Cut Sheet - Not for Submittal
Printed Date: 04/07/2026
Mark: KEF-2
Model: GPFV-26-G24

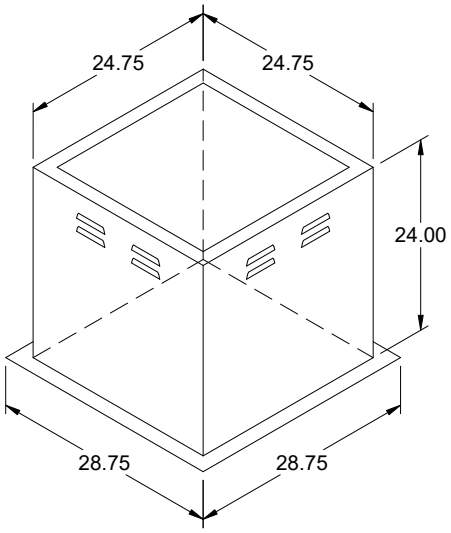

Model: GPFV

Vented Roof Curb

Standard Construction Features:

- Roof Curb fits between the building roof and the fan mounted directly to the roof support structure - Constructed of either 18 ga galvanized steel or 0.064 in. aluminum - Straight Sided without a cant - Includes louvered vents to vent heat - 2 in. or 5 in. mounting flange - Height - Designed to provide required 40 in. minimum discharge height above roof line per NFPA 96 Notes: - The maximum roof opening dimension should not be greater than the "Actual" top outside dimension minus 2 in.. - The minimum roof opening dimension should be at least 2.5 in. more than the damper dimension or recommended duct size. - The Roof Opening Dimension may or may not be the same as the Structural Opening Dimension. - Damper Trays are not available

General

Tag	Qty	Model	Sizing Method	Undersizing (in.)	Weight (lb)	Shipped Assembled	Union Label
KEF-2	1	GPFV-26	Nominal	1.25	33	Yes	No Preference

Dimensions

Curb Height (in.)	Nominal Outside Width (in.)	Nominal Outside Length (in.)	Actual Outside Width (in.)	Actual Outside Length (in.)	Actual Inside Width (in.)	Actual Inside Length (in.)	Flange Width (in.)	Flange Length (in.)	Hinge Base Width* (in.)	Hinge Base Length* (in.)
24	26	26	24.75	24.75	21.25	21.25	28.75	28.75	25	25
*May not be applicable										

Accessories

Material
Galvanized

GREENHECK
Building Value in Air.

Cut Sheet - Not for Submittal
Printed Date: 04/07/2026
Mark: MAU
Model: IGX-P122-H22-MF-N

IGX-P122-H22-MF-N

Unit Performance

Design Conditions

Elevation (ft)	Summer		Winter (°F)	Supply (CFM)	Outdoor Air (CFM)	Min Outside Air Volume Up To (CFM)
	DB (°F)	WB (°F)				
131	71.4	60.3	-8.9	4,170	4,170	0

Unit Specifications

Qty	Weight (lb)	Cooling Type	Heating Type	Unit Installation	Unit ETL Listing	Furnace ETL Listing
1	1,678 (+/- 5%)	None	Indirect Gas Furnace	Outdoor	UL / cUL 60335-2-40	ANSI Z83.8 / CSA 2.6

Configuration

Unit Orientation	Unit Configuration	Outdoor Air Intake	Return Air Intake	Supply Air Discharge
Horizontal	Recirculation	End	Bottom	Bottom

Heating Specifications

Type	Gas Type	Gas Pressure		Capacity (MBH)		Temperature Rise		Turndown	Performance	
		Min (in. wg)	Max (PSI)	Input	Output	Min (°F)	Max (°F)		EAT (°F)	LAT (°F)
Indirect Gas Furnace	Natural	6	0.5	500.0	405.0	3.4	89.8	26:6:1	-8.9	80.9

Air Performance

Type	Total Volume (CFM)	External SP (in. wg)	Total SP (in. wg)	RPM	Operating Power (hp)	Fan			
						Qty	Type	Size (in.)	Drive-Type
Supply	4,170	0.5	0.987	911	1.15	1	Mixed Flow	22	Direct-Drive

Motor Specifications

Motor	Qty	Size (HP)	Enclosure	Efficiency	RPM
Supply Fan Motor	1	1 1/2 hp	ODP	NEMA Premium	1180

Electrical Specifications

Power Supply	Rating (V/C/P)	MCA (A)	MOP (A)	SCCR
Unit	460/60/3	4.9	15.0	5kA

GREENHECK
Building Value in Air.

Cut Sheet - Not for Submittal
Printed Date: 04/07/2026
Mark: MAU
Model: IGX-P122-H22-MF-N

CONSTRUCTION FEATURES AND ACCESSORIES

Unit	
Unit Installation - Indoor or Outdoor	Std
Unit Construction - Double Wall	X
Wall Insulation - 1in. fiberglass - Entire unit	X
Base Insulation - 1in. fiberglass - entire unit base pan	Std
Paneled Bottom - Sheet metal liner for base insulation	
Corrosion Resistant Fasteners	Std
Access and Connections - Right side when facing intake	X
Service Access - Hinged access doors	X
Unit Finish - G90 Galvanized	X
Finish Color	
Supply Fan - Direct-drive, mixed flow plenum	X
Supply Fan and Motor Vibration isolation - Neoprene	X
Controls	
Unit Controls - Microprocessor	X
Remote Panel	
BMS Communication - Monitoring and control	X
BMS Protocol - BACnet MSTP	X
Temperature Control	X
Supply Fan VFD - VFD by factory	X
Supply Fan Control - Constant Volume	X
Unoccupied Mode (Night Setback)	
Recirculation Control - External 2-10 VDC signal	X
Control Accessories	
Touchscreen Mounting - Surface Mount	X
Heating Inlet Air Sensor	X
Cooling Inlet Air Sensor	
Dirty Filter Switch	X
Fire Stat Type III (Ships loose)	
120V/24V Smoke Detector (Ships loose)	
Inlet Damper End Switch	
External Cooling Lockout Relay	
Freeze Protection (Supply Air Low Limit)	X
Auxiliary Supply Starter Contacts	
Auxiliary Exhaust Starter Contacts	
Airflow Proving Monitoring Contact	

Accessories	
Factory Installed, Lockable, NEMA 3R Disconnect	Std
Weatherhood - Aluminum Mesh filtered	X
Supply Air Filters - 2" MERV 8, N/A	X
Outdoor Air Inlet Damper	X
Supply Air Outlet Damper	
Return Air Damper - Low leakage	X
Diffuser	
Roof Curb	
Combination Curb	
Electrofin Coil Coating	
Fan Bearing Extended Lube Lines	
Inlet Damper Module	
Spare Belts	
Spare Filters	
Motor with Shaft Grounding	
Service Outlet	
Service Lights	
Gas Heating Accessories	
Furnace Venting - Outdoor	X
Venting Type - Power vented	Std
Furnace Venting Method	X
Concentric Venting Adapter	
Direct Spark Ignition	Std
Flame Sensing - Flame rod	Std
Heat Exchanger Material	X
Furnace Controls	X
Agency Approval - ETL	Std
External Gas Pressure Regulator (Ships loose)	X
DDC Assisted Furnace Commisioning	X
Warranty Options	
Unit Warranty - 18 months (std.)	X
5 Year Compressor Warranty	
5 Year Heat Exchanger Warranty	
10 Year Heat Exchanger Warranty	

Standard Option	Std
Not Included	
Included	X

GREENHECK
Building Value in Air.

Cut Sheet - Not for Submittal
Printed Date: 04/07/2026
Mark: MAU
Model: IGX-P122-H22-MF-N

Fan Charts And Performance

Supply Fan Performance

Total Volume (CFM)	External SP (in. wg)	Total SP (in. wg)	RPM	Operating Power (hp)	Motor		Fan		
					Qty	Size (HP)	Qty	Type	Drive-Type
4,170	0.5	0.987	911	1.15	1	1.5	1	Mixed Flow	Direct

Pressure Drop (in. wg)

Diffuser	Weatherhood	Filter	Damper	Cooling	Heating	External	Total
-	0.071	0.086	-	-	0.33	0.5	0.987

Sound Performance in Accordance with AMCA

Sound Power by Octave Band								Lwa	dBA	Sones
62.5	125	250	500	1000	2000	4000	8000			
72	68	74	68	64	70	67	65	75	64	12.6

Supply Fan

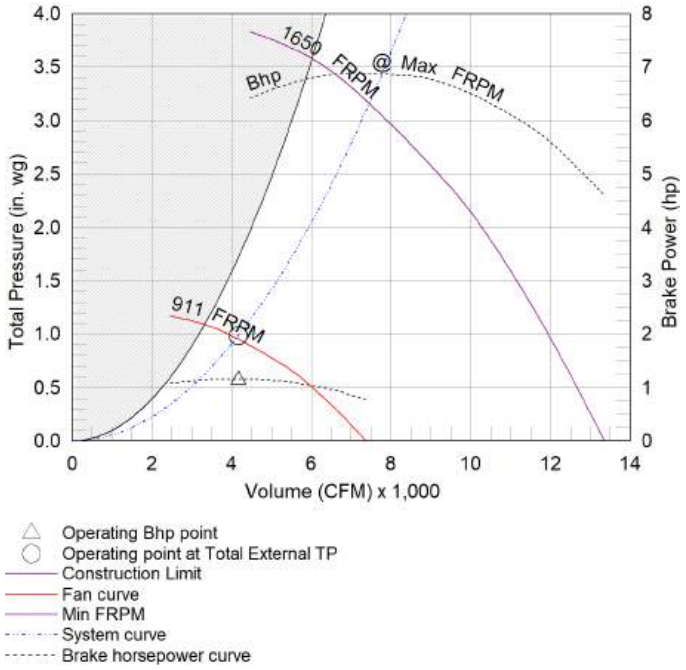

GREENHECK
Building Value in Air.

Cut Sheet - Not for Submittal
Printed Date: 04/07/2026
Mark: MAU
Model: IGX-P122-H22-MF-N

Heating Specifications

Heating Performance

Type	Gas Type	Gas Pressure		Capacity (MBH)		Temperature Rise		Turndown	Performance	
		Min (in. wg)	Max (PSI)	Input	Output	Min (°F)	Max (°F)		EAT (°F)	LAT (°F)
Indirect Gas Furnace	Natural	6	0.5	500.0	405.0	3.4	89.8	26:6:1	-8.9	80.9

Heating Information

Furnace Efficiency	Heat Exch. Material	Venting	Venting Method	Gas Pressure Regulators	Heat Exchanger Warranty
81%	StainlessSteel	Outdoor	VerticalStack	-	-

Unit Details
ANSI Standard Z83.8 and CSA 2.6
Direct Spark Ignition

Power Venting
24 Volt Control Power

GREENHECK
Building Value in Air.

Cut Sheet - Not for Submittal
Printed Date: 04/07/2026
Mark: MAU
Model: IGX-P122-H22-MF-N

ELEVATION VIEW

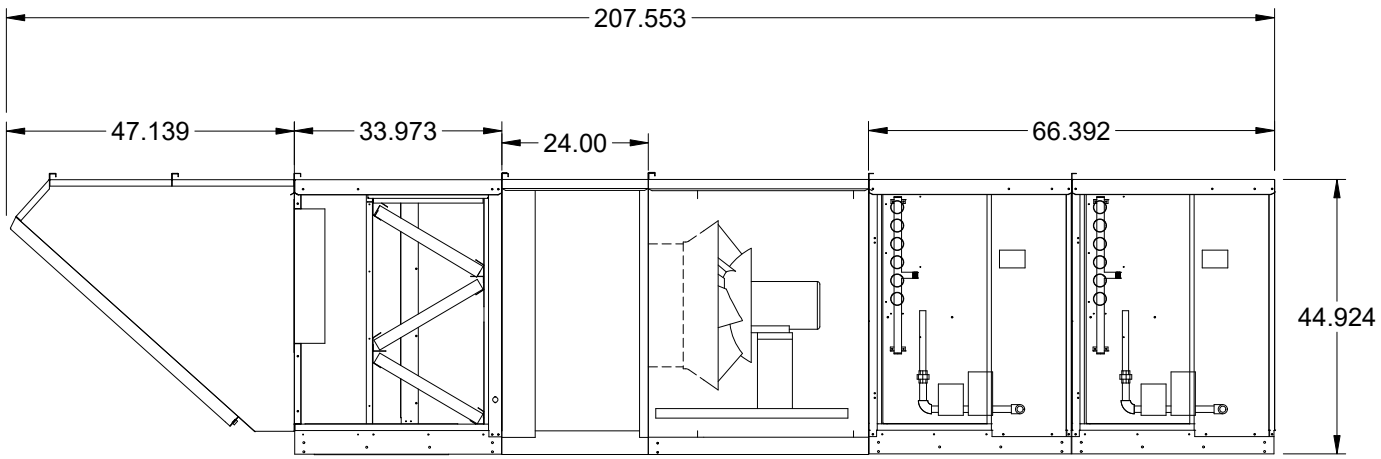

Notes - Elevation View
Standard configuration for unit access is on the right-hand side, when looking into the unit intake in the direction of airflow.
Order of unit sections is from intake of unit to discharge of unit.
Sections included on this unit: Weatherhood Section, MixingBox Section, Control Center Module Section, Blower Section, Furnace1 Section, Furnace2 Section
Insulation: Double Wall, Entire Unit Insulated.

PLAN VIEW

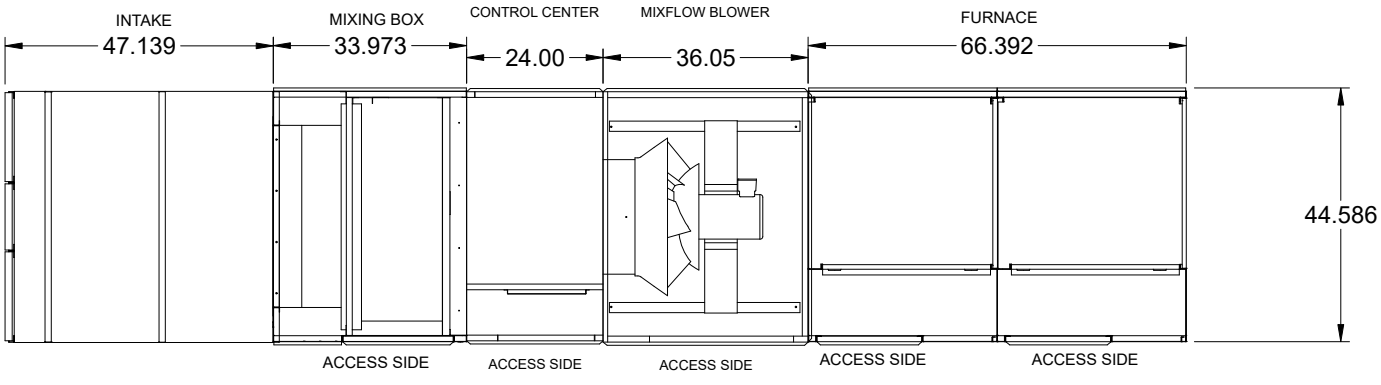

Notes - Plan View
Standard configuration for unit access is on the right-hand side, when looking into the unit intake in the direction of airflow.

GREENHECK
Building Value in Air.

Cut Sheet - Not for Submittal
Printed Date: 04/07/2026
Mark: MAU
Model: IGX-P122-H22-MF-N

END VIEW

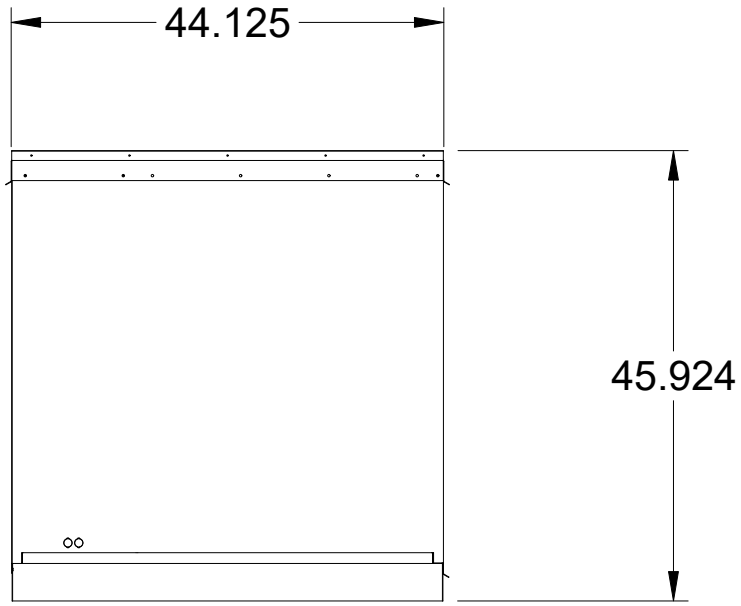

FOOTPRINT VIEW

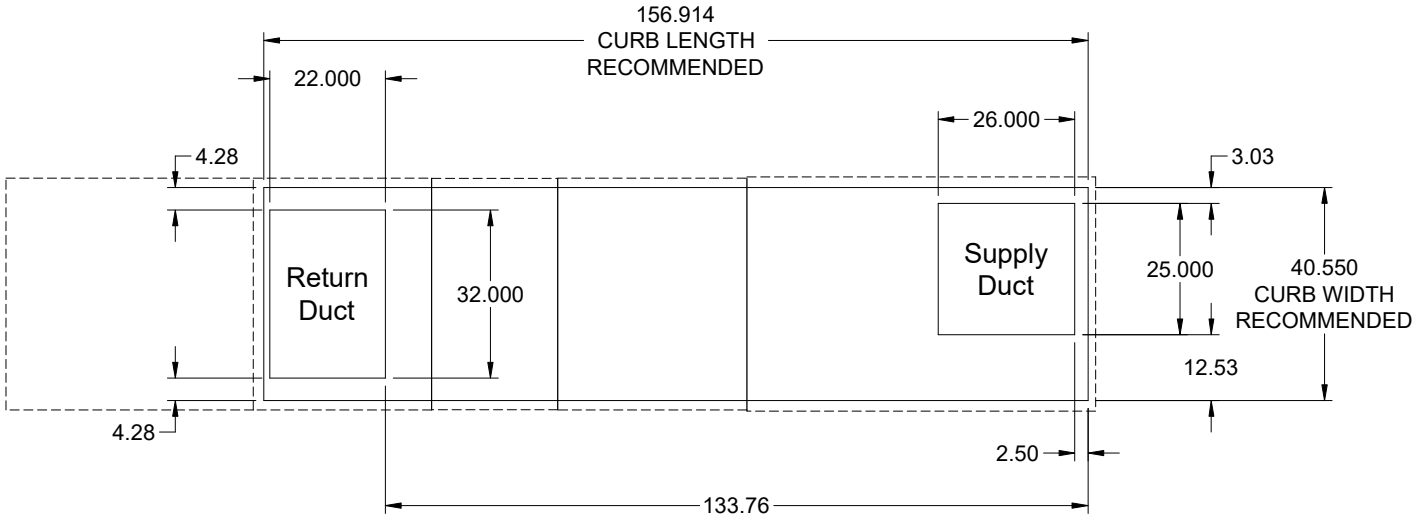

Notes - Footprint View
Minimum Roof Opening: The minimum roof opening size is the illustrated duct diameter plus 0.25 in. on all sides. For example: If the duct size is 14 x 14 in. square, the minimum roof opening size is 14.5 x 14.5 in. square.
Maximum Roof Opening: There must be a minimum perimeter of 1.75 in. between the roof opening and the roof curb. For example: If the roof curb is 75 x 30 in. square, the maximum roof opening is 71.5 x 26.5 in. inches square.
The weatherhood and filter sections of the make-up air unit extend beyond the curb. This is by design, to prevent water infiltration.

GREENHECK
Building Value in Air.

Cut Sheet - Not for Submittal
Printed Date: 04/07/2026
Mark: MAU
Model: IGX-P122-H22-MF-N

Electrical Connections

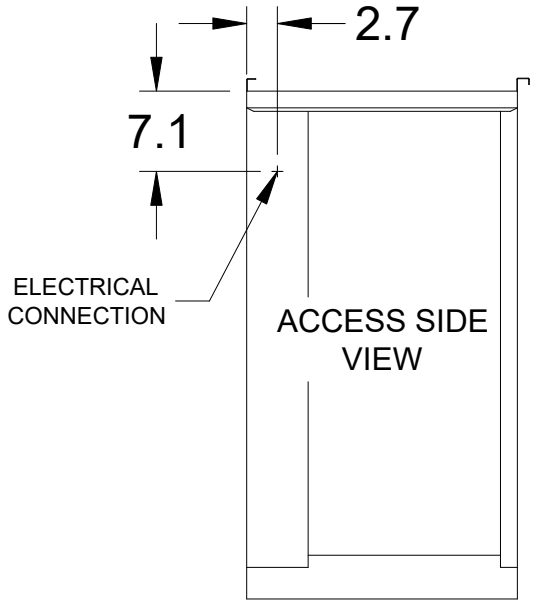

GREENHECK
Building Value in Air.

Cut Sheet - Not for Submittal
Printed Date: 04/07/2026
Mark: MAU
Model: IGX-P122-H22-MF-N

Clearance Specifications

Recommended Minimum Combustible Clearances				
	Floor (in.)	**Top (in.)**	**Sides (in.)**	**Ends (in.)**
Indirect Fired Units	0	0	0	0

Notes - Combustible Clearances
Clearance to combustibles is defined as the minimum distance required between the heating source and the adjacent combustible surfaces to ensure the adjacent surface's temperature does not exceed 90 F above the ambient temperature.
Reference venting guidelines for combustion blower clearances.

Recommended Minimum Service Clearances	
Housing 32 and less (in.)	**Housing 35 and higher (in.)**
42 on the controls side of the unit	N/A

Notes - Service Clearances
To ensure ample space for component removal (evaporative cooling media, coils, filters, etc.), service clearances should be 6 in. wider than the width of the module itself.

GREENHECK
Building Value in Air.

Cut Sheet - Not for Submittal
Printed Date: 04/07/2026
Mark: MAU
Model: IGX-P122-H22-MF-N

Wiring Diagram

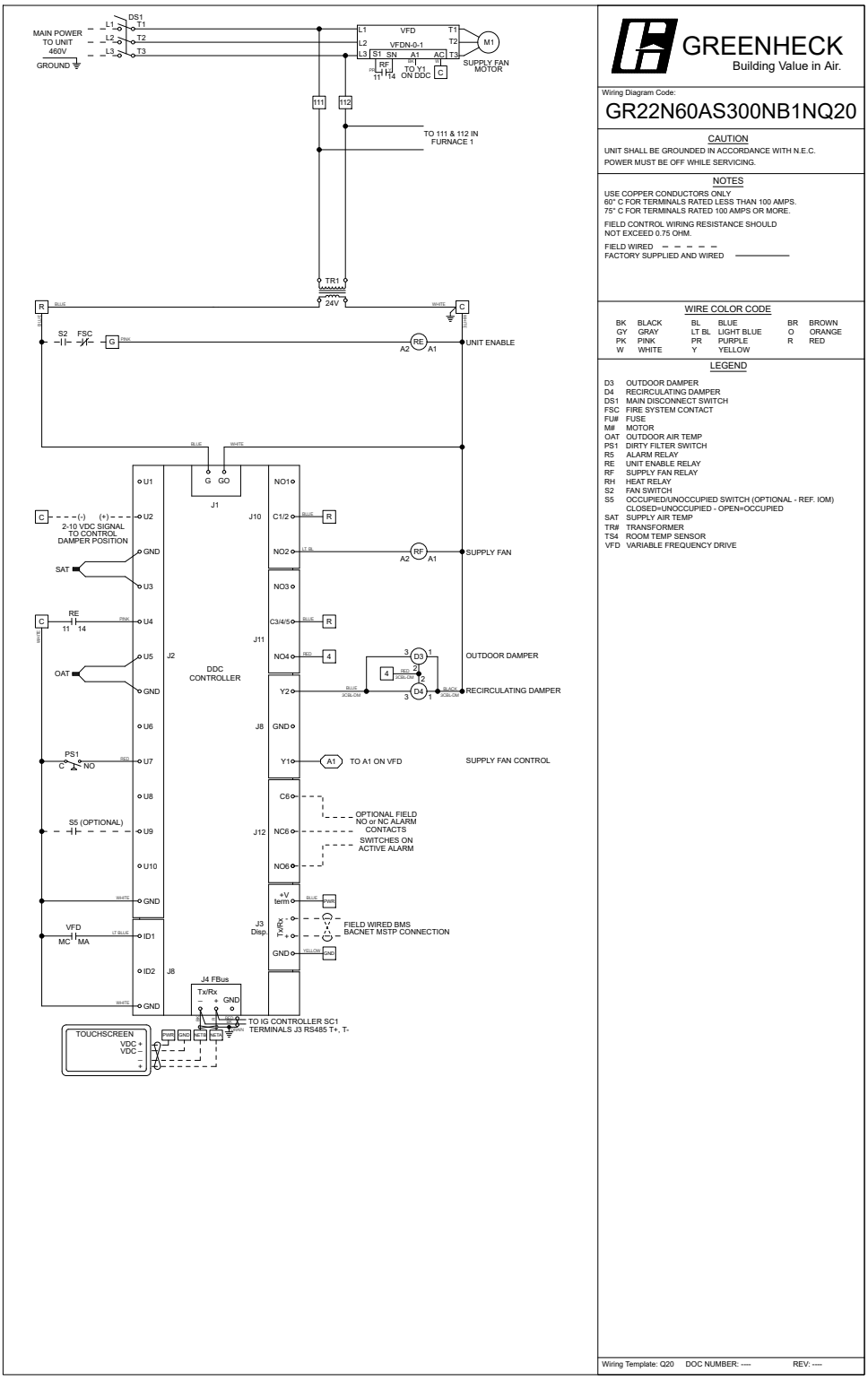

GREENHECK
Building Value in Air.

Wiring Diagram Code:
GR22N60AS300NB1NQ20

CAUTION
UNIT SHALL BE GROUNDED IN ACCORDANCE WITH N.E.C.
POWER MUST BE OFF WHILE SERVICING.

NOTES
USE COPPER CONDUCTORS ONLY
60° C FOR TERMINALS RATED LESS THAN 100 AMPS.
75° C FOR TERMINALS RATED 100 AMPS OR MORE.
FIELD CONTROL WIRING RESISTANCE SHOULD NOT EXCEED 0.75 OHM.
FIELD WIRED
FACTORY SUPPLIED AND WIRED

WIRE COLOR CODE

BK	BLACK	BL	BLUE	BR	BROWN
GY	GRAY	LT BL	LIGHT BLUE	O	ORANGE
PK	PINK	PR	PURPLE	R	RED
W	WHITE	Y	YELLOW		

LEGEND

D3	OUTDOOR DAMPER
D4	RECIRCULATING DAMPER
DS1	MAIN DISCONNECT SWITCH
FSC	FIRE SYSTEM CONTACT
FU#	FUSE
M#	MOTOR
OAT	OUTDOOR AIR TEMP
PS1	DIRTY FILTER SWITCH
RS	ALARM RELAY
RE	UNIT ENABLE RELAY
RF	SUPPLY FAN RELAY
RH	HEAT RELAY
S2	FAN SWITCH
SS	OCCUPIED/UNOCCUPIED SWITCH (OPTIONAL - REF. IOM) CLOSED=UNOCCUPIED - OPEN=OCCUPIED
SAT	SUPPLY AIR TEMP
TR#	TRANSFORMER
TS4	ROOM TEMP SENSOR
VFD	VARIABLE FREQUENCY DRIVE

Wiring Template: Q20 DOC NUMBER: ---- REV: ----

Manufacturer reserves the right to change, modify, or improve this product at anytime

GREENHECK
Building Value in Air.

Cut Sheet - Not for Submittal
Printed Date: 04/07/2026
Mark: MAU
Model: IGX-P122-H22-MF-N

Furnace Wiring Diagram

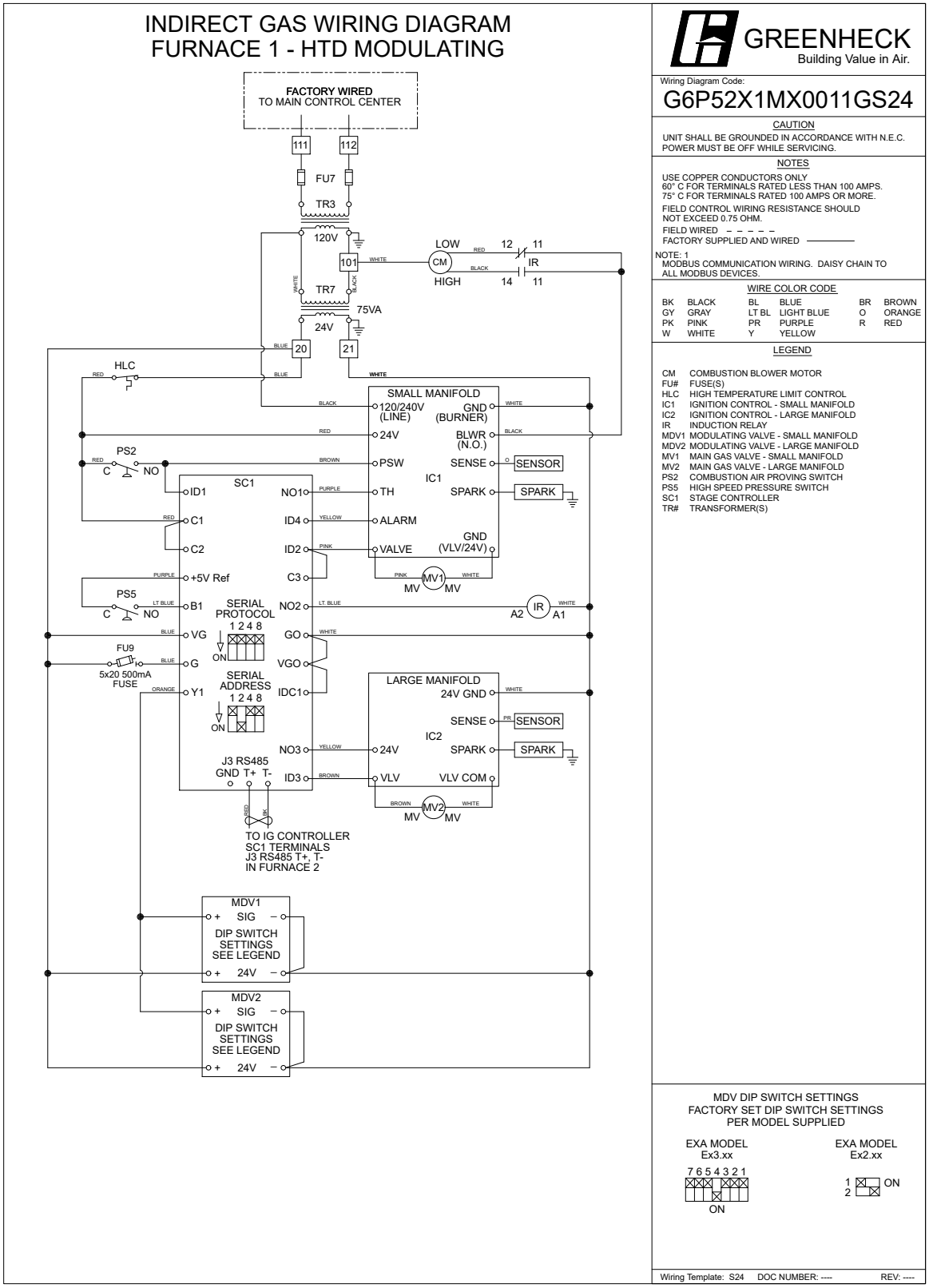

GREENHECK
Building Value in Air.

Wiring Diagram Code:
G6P52X1MX0011GS24

CAUTION

UNIT SHALL BE GROUNDED IN ACCORDANCE WITH N.E.C.
POWER MUST BE OFF WHILE SERVICING.

NOTES

USE COPPER CONDUCTORS ONLY
60° C FOR TERMINALS RATED LESS THAN 100 AMPS.
75° C FOR TERMINALS RATED 100 AMPS OR MORE.

FIELD CONTROL WIRING RESISTANCE SHOULD NOT EXCEED 0.75 OHM.

FIELD WIRED – – – – –
FACTORY SUPPLIED AND WIRED ————

NOTE: 1
MODBUS COMMUNICATION WIRING. DAISY CHAIN TO ALL MODBUS DEVICES.

WIRE COLOR CODE

BK	BLACK	BL	BLUE	BR	BROWN
GY	GRAY	LT BL	LIGHT BLUE	O	ORANGE
PK	PINK	PR	PURPLE	R	RED
W	WHITE	Y	YELLOW		

LEGEND

CM	COMBUSTION BLOWER MOTOR
FU#	FUSE(S)
HLC	HIGH TEMPERATURE LIMIT CONTROL
IC1	IGNITION CONTROL - SMALL MANIFOLD
IC2	IGNITION CONTROL - LARGE MANIFOLD
IR	INDUCTION RELAY
MDV1	MODULATING VALVE - SMALL MANIFOLD
MDV2	MODULATING VALVE - LARGE MANIFOLD
MV1	MAIN GAS VALVE - SMALL MANIFOLD
MV2	MAIN GAS VALVE - LARGE MANIFOLD
PS2	COMBUSTION AIR PROVING SWITCH
PS5	HIGH SPEED PRESSURE SWITCH
SC1	STAGE CONTROLLER
TR#	TRANSFORMER(S)

MDV DIP SWITCH SETTINGS
FACTORY SET DIP SWITCH SETTINGS
PER MODEL SUPPLIED

EXA MODEL
Ex3.xx

7 6 5 4 3 2 1
ON

EXA MODEL
Ex2.xx

1 2 ON

Wiring Template: S24 DOC NUMBER: ---- REV: ----

Manufacturer reserves right to change, alter, or improve this product at any time.

GREENHECK
Building Value in Air.

Cut Sheet - Not for Submittal
Printed Date: 04/07/2026
Mark: MAU
Model: IGX-P122-H22-MF-N

BMS Protocol Points List

Greenheck Monitoring Interface v2.6 Modbus/BACnet Points List

Variable	Description	BACnet Object	Modbus Register	Read or Write	Text or Unit of M Active	Text or Unit of M Inactive	Included
Space_Temp_Analog_Input	Space Temperature	AI-1	30002	R	°F		
Supply_Temp_Analog_Input	Supply Temperature	AI-2	30004	R	°F		X
Outside_Air_Temp_Analog_Input	Outside Air Temperature	AI-3	30006	R	°F		X
Space_Static_Pressure_Analog_Input	Space Static Pressure	AI-9	30018	R	"wc		
Supply_Duct_Static_Pressure_Analog_Input	Supply Duct Static Pressure	AI-10	30020	R	"wc		
Space_CO2_1_Analog_Input	Space CO2 ppm	AI-11	30022	R	ppm		
Return_CO2_Analog_Input	Return CO2 ppm	AI-12	30024	R	ppm		
Aux_In_Customer_1	Customer defined auxiliary input	AI-22	30044	R	selectable		
Aux_In_Customer_2	Customer defined auxiliary input	AI-23	30046	R	selectable		
Aux_In_Customer_3	Customer defined auxiliary input	AI-24	30048	R	selectable		
Aux_In_Customer_4	Customer defined auxiliary input	AI-25	30050	R	selectable		
Aux_In_Customer_5	Customer defined auxiliary input	AI-26	30052	R	selectable		
Aux_In_Customer_6	Customer defined auxiliary input	AI-27	30054	R	selectable		
Aux_In_Customer_7	Customer defined auxiliary input	AI-28	30056	R	selectable		
Aux_In_Customer_8	Customer defined auxiliary input	AI-29	30058	R	selectable		
Aux_In_Customer_9	Customer defined auxiliary input	AI-30	30060	R	selectable		
Aux_In_Customer_10	Customer defined auxiliary input	AI-31	30062	R	selectable		
Temperature_Setpoint	Occupied Temperature Setpoint	AV-1	40002	R/W	°F		X
Temperature_Heat_Cool_Deadband	Occupied Spt Deadband - Space/Return Reset	AV-2	40004	R/W	°F (div 2 add/sub Setpoint)		
Temperature_Setpoint_Unoccupied	Unoccupied Temperature Setpoint	AV-3	40006	R/W	°F		X
Temperature_Heat_Cool_Deadband_Unoccupied	Unoccupied Spt Deadband - Space/Return Reset	AV-4	40008	R/W	°F (div 2 add/sub Setpoint)		X
Supply_Temperature_Minimum_Cooling_Setpoint	Minimum supply air temperature - Cooling	AV-5	40010	R/W	°F		
Supply_Temperature_Maximum_Cooling_Setpoint	Maximum supply air temperature - Cooling	AV-6	40012	R/W	°F		
Supply_Temperature_Minimum_Heating_Setpoint	Minimum supply air temperature - Heating	AV-7	40014	R/W	°F		X
Supply_Temperature_Maximum_Heating_Setpoint	Maximum supply air temperature - Heating	AV-8	40016	R/W	°F		X
Economizer_Temp_Enable_Setpoint	Economizer Ambient Temp Enable Setpoint	AV-9	40018	R/W	°F		
Cooling_Lockout_Setpoint	Cooling Ambient Lockout Setpoint	AV-13	40026	R/W	°F		
Heating_Lockout_Setpoint	Heating Ambient Lockout Setpoint	AV-14	40028	R/W	°F		X
Economizer_Lockout_Setpoint	Economizer Lockout Setpoint	AV-15	40030	R/W	°F		
Space_Static_Pressure_Setpoint	Space Static Pressure Setpoint	AV-16	40032	R/W	"wc		
Supply_Duct_Static_Pressure_Setpoint	Supply Duct Static Pressure Setpoint	AV-17	40034	R/W	"wc		
Space_CO2_Setpoint	Space CO2 Setpoint	AV-18	40036	R/W	ppm		
Outside_Air_Damper_Minimum_Setpoint_Occ	Occupied Outside Air Damper Min Setpoint	AV-19	40038	R/W	%		X
Outside_Air_Damper_Minimum_Setpoint_Unocc	Unoccupied Outside Air Damper Min Setpoint	AV-20	40040	R/W	%		
Heat_Vent_Changeover_Temp	Heat Vent Changeover Setpoint	AV-21	40042	R/W	°F		
Heat_Vent_Changeover_Hysteresis	Heat Vent Changeover Hysteresis (Summer Only)	AV-22	40044	R/W	°F		
HV_Summer_Damper_Setpoint_Occ	Occupied OAD Setpoint when in Summer Mode	AV-23	40046	R/W	%		
HV_Summer_Damper_Setpoint_Unocc	Unoccupied OAD Setpoint when in Summer Mode	AV-24	40048	R/W	%		
HV_Summer_Lockout	Summer Mode Ambient Lockout Setpoint	AV-25	40050	R/W	°F		
HV_Winter_Damper_Setpoint_Occ	Occupied OAD Setpoint when in Winter Mode	AV-26	40052	R/W	%		
HV_Winter_Damper_Setpoint_Unocc	Unoccupied OAD Setpoint when in Winter Mode	AV-27	40054	R/W	%		
Supply_Air_Low_Limit_Setpoint	Low Supply Temp resulting in unit shutdown	AV-28	40056	R/W	°F		X
Outside_Temp_from_BMS	Outside Temp from BMS. (Source set to BMS)	AV-30	40060	R/W	°F (Source set to BMS)		X
Space_1_CO2_from_BMS	Space CO2 from BMS. (Source set to BMS)	AV-33	40066	R/W	ppm (Source set to BMS)		
Return_CO2_from_BMS	Return CO2 from BMS. (Source set to BMS)	AV-34	40068	R/W	ppm (Source set to BMS)		
Space_Static_from_BMS	Space Static from BMS.	AV-36	40072	R/W	"wc (Source set to BMS)		
Space_Temp_from_BMS	Space Temp from BMS	AV-37	40074	R/W	°F (Source set to BMS)		
SF_Control_Signal_BMS	BMS to control signal for supply fan speed	AV-38	40076	R/W	% (Source set to BMS)		
OAD_Control_Signal_BMS	Allows the BMS to control OAD position	AV-39	40078	R/W	% (Source set to BMS)		
Aux_BMS_Analog_Output_1	BMS Commanded auxilary analog output	AV-40	40080	R/W	selectable		
Unit_Status_Mode	Unit Status Word	AV-41	30064	R	See Unit Status Table		X

GREENHECK
Building Value in Air.

Cut Sheet - Not for Submittal
Printed Date: 04/07/2026
Mark: MAU
Model: IGX-P122-H22-MF-N

Supply_Temperature_Calculated_Setpoint	Active Supply Temperature Setpoint	AV-42	30066	R	°F		X
Cooling_1_Ramp_Capacity	Cooling Ramp 1 Status Value	AV-43	30068	R	%		
Economizer_Ramp	Economizer Ramp	AV-44	30070	R	%		
Heating_Capacity	Heating Ramp	AV-46	30074	R	%		X
OAD_CFM_BMS	OAD CFM	AV-56	30094	R	cfm		
Active_Temperature_Setpoint	Active Temperature Set point	AV-57	30096	R	°F		X
Chilled_Water_1_Valve_Analog_Output	Chilled Water 1 Valve Analog Output	AV-58	30098	R	%		
Electric_Heater_1_Analog_Output	Electric Heater 1 Analog Output	AV-59	30100	R	%		
Hot_Water_Valve_1_Analog_Output	Hot Water Valve 1 Analog Output	AV-60	30102	R	%		
Mod_Gas_Furnace_1_Analog_Output	Mod Gas Furnace 1 Analog Output	AV-61	30104	R	%		X
Outside_Air_Damper_Analog_Output	Outside Air Damper Analog Output	AV-62	30106	R	%		X
Supply_Fan_Speed_Analog_Output	Supply Fan Speed Analog Output	AV-63	30108	R	%		X
Modulating_Compressor_Analog_Output_BMS	Modulating Compressor Analog Output	AV-64	30110	R	%		
Active_Cooling_Setpoint	Active Cooling Setpoint - Unoccupied	AV-69	30120	R	°F		X
Active_Heating_Setpoint	Active Heating Setpoint - Unoccupied	AV-70	30122	R	°F		X
Exhaust_Fan_1_Status_Digital_Input	Exhaust Fan Status	BI-1	10005	R	Active	Inactive	
Supply_Fan_1_Status_Digital_Input	Supply Fan Status	BI-2	10006	R	Active	Inactive	X
BMS_Watchdog	BMS Watchdog command - BMS communications	BV-1	1	R/W	Active	Inactive	X
System_Enable	Master system enable/disable point.	BV-2	2	R/W	Active	Inactive	X
BMS_Occupancy_Command	Occupancy Command	BV-3	3	R/W	Unoccupied	Occupied	X
Reset_All_Alarms	Alarm Reset Command.	BV-4	4	R/W	Reset	Normal	X
Outside_Temp_Source_BMS	Outside Temp Source Selection	BV-6	6	R/W	BMS	Local	X
Space_1_CO2_Source_BMS	Space CO2 Source Selection	BV-9	9	R/W	BMS	Local	
Return_CO2_Source_BMS	Return CO2 Source Selection	BV-10	10	R/W	BMS	Local	
Space_Static_Source_BMS	Space Static Source Selection	BV-12	12	R/W	BMS	Local	
Space_Temp_Source_BMS	Space Temp Source Selection	BV-13	13	R/W	BMS	Local	
SF_Control_Source_BMS	Allows the BMS to control supply fan speed	BV-14	14	R/W	BMS	Local	
OAD_Control_Source_BMS	Allows the BMS to control OAD position	BV-15	15	R/W	BMS	Local	
Aux_BMS_Digital_Output_1	BMS Commanded auxilary digital output	BV-16	16	R/W	Active	Inactive	
Aux_BMS_Digital_Output_2	BMS Commanded auxilary digital output	BV-17	17	R/W	Active	Inactive	
Occupied	Occupancy	BV-18	10001	R	Occupied	Unoccupied	X
Global_Alarm	Alarm Output - Any or Shutdown Selectable	BV-19	10002	R	Alarm	Normal	X
BMS_Watchdog_Active	Status of the BMS Watchdog Ping	BV-20	10003	R	Active	Inactive	X
Temperature_Reset_Mode	Occupied Reset Mode	IV-1	40082	R	1-Supply Temp Control;2-Space;3-Return;4-Outside		X
Temperature_Reset_Mode_Unoccupied	Unoccupied Reset Mode	IV-2	40084	R			X
HV_Summer_Operation_Occ	Heat Vent Summer Operation Occupied	IV-3	40086	R	1-Off; 2-Continuous;		
HV_Summer_Operation_Unocc	Heat Vent Summer Operation Unoccupied	IV-4	40088	R			
HV_Winter_Operation_Occ	Heat Vent Winter Operation Occupied	IV-5	40090	R	1-Off; 2-Continuous; 3-Cycle		
HV_Winter_Operation_Unocc	Heat Vent Winter Operation Unoccupied	IV-6	40092	R			
Active_Temperature_Reset_Mode	Active Occupied Reset Type Setpoint	IV-7	30124	R	1-Supply Temp Control;2-Space;3-Return;4-Outside		X
Active_Temperature_Reset_Mode_Unocc	Active Unoccupied Reset Type Setpoint	IV-8	30126	R			X
LatestAlm	Most recent alarm	IV-9	30128	R	See Alarm Table		X
Digital_Output_Word	Digital Output Enables	IV-10	30132	R	Bitstring - See Table		X
Cooling_Alarm_Word	Cooling Device Alarms	IV-11	30136	R	Bitstring - See Table		
Device_Offline_Word	Device Communication Alarms	IV-12	30140	R	Bitstring - See Table		X
Device_Alarm_Word	Device Alarms	IV-13	30144	R	Bitstring - See Table		X
Heating_Alarm_Word	Heating Device Alarms	IV-14	30148	R	Bitstring - See Table		X
Unit_Status_Word	Unit Status Word	IV-15	30152	R	Bitstring - See Table		X

Unit Status Index

0	System Off	4	Supply Fan Starting	8	Sys On-Heating	12	Sys On-Dehumid & Reheat	16	Unocc-Cooling	20	Remote Off
1	Initial Delay	5	System On	9	Sys On-Cooling	13	Unocc-Unit Off	17	Unocc-Dehumid	21	Alarm
2	Opening Dampers	6	Defrost Mode Active	10	Sys On-Econ & Cooling	14	Unocc-Unit On	18	Unocc-Dehumid & Reheat		
3	Exhaust Fan Starting	7	Sys On-Economizer	11	Sys On-Dehumidifying	15	Unocc-Heating	19	Manual Override		

IG Alarm (REF.IG_Alarm Point 45)

BIT 0	BIT 1	BIT 2	BIT 3	BIT 4
No Flame	Ignition Controller	Max Retries	High Limit	IG Furnace Offline

GREENHECK
Building Value in Air.

Cut Sheet - Not for Submittal
Printed Date: 04/07/2026
Mark: MAU
Model: IGX-P122-H22-MF-N

Corner Weights

444 lb 382 lb

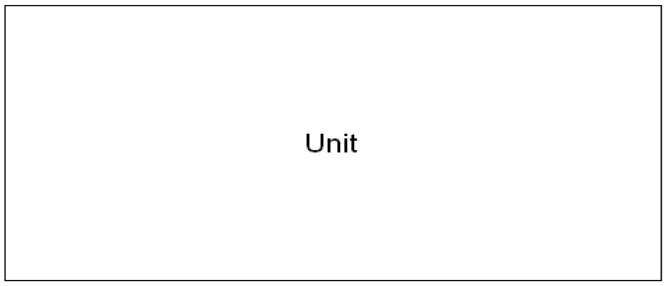

457 lb 394 lb

GREENHECK
Building Value in Air.

Cut Sheet - Not for Submittal
Printed Date: 04/07/2026
Mark: MAU
Model: IGX-P122-H22-MF-N

Surface Mount - Touchscreen Panel

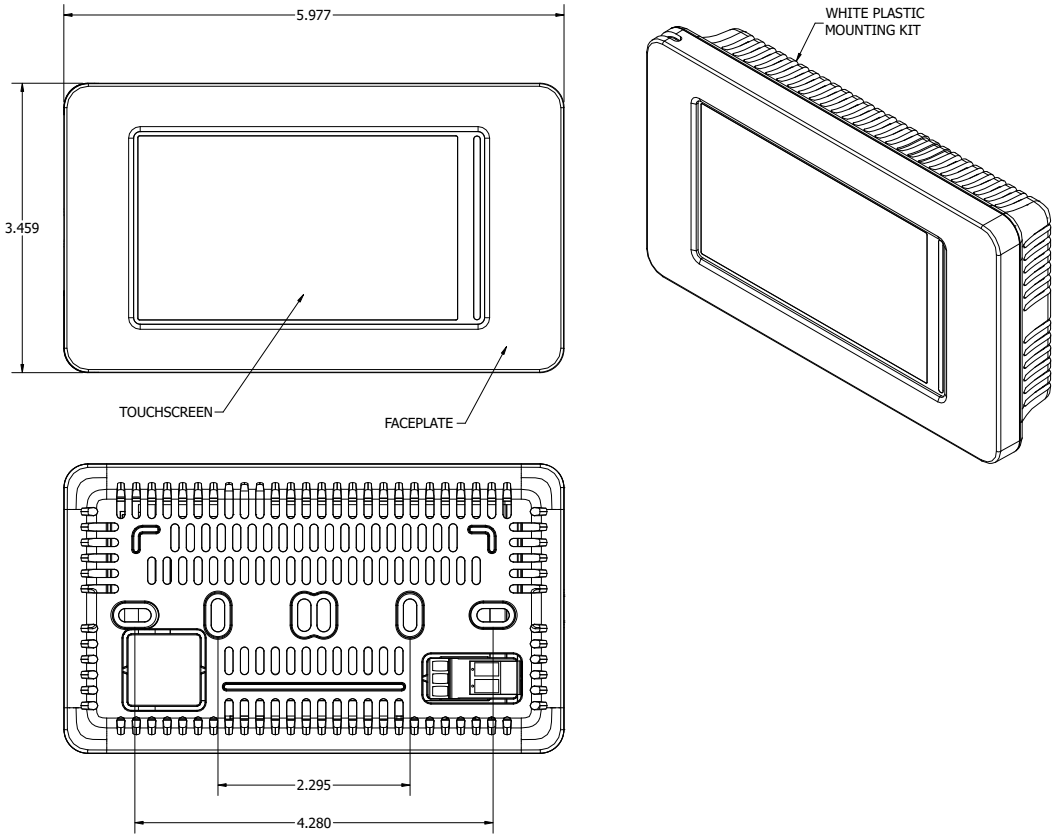

GREENHECK
Building Value in Air.

Cut Sheet - Not for Submittal
Printed Date: 04/07/2026
Mark: MAU
Model: IGX-P122-H22-MF-N

SEQUENCE OF OPERATIONS

Unit Controls
The unit shall be provided from the factory with:

- 24VAC Transformer
- Factory mounted and wired outdoor air and recirculated air dampers and actuator

Microprocessor Controller
The microprocessor control shall be factory programmed, mounted, wired and tested. Controller shall have a lighted LCD display and keypad for changing set points and monitoring unit operation. The controller shall be equipped with the following sensors:

- Outdoor air temperature sensor
- Supply discharge temperature sensor (must be field mounted in the supply ductwork)

Building Management System (BMS) Communication
The microprocessor controller shall be capable of integrating into a Building Management System (BMS) to allow the BMS to remotely adjust set points, view unit status points and alarms. The microprocessor shall include the ability to communicate over the following protocol:

- BACnet® MSTP

Unit Start Command
A contact closure or jumper wire must be field wired between terminals R and G to enable the unit. When terminal G is energized the unit shall operate as described below. When terminal G is de-energized the unit is disabled.

Internal Time Clock (Schedule)
The microprocessor controller is equipped with an internal 7-day programmable time clock, allowing the user to add up to seven different occupancy schedules.

Occupied/Unoccupied Modes
The microprocessor controller offers the following modes for determining occupancy:

- The internal time clock
- A remote contact (see wiring diagram for details)
- The Building Management System (BMS)

The unit can be temporarily overridden to the occupied mode via a dry contact or the keypad display. After the override time has expired (1 hr, adj) the unit will return to the scheduled occupied/unoccupied mode.

Occupied Mode Unit Start-Up Sequence

- Unit enable input must be closed (contact closure between R and G).
- Initial delay, microprocessor controller initialization sequence.
- Factory mounted and wired outdoor air and recirculated air damper actuator is powered.
- Supply fan starts after adj. delay.
- Tempering operation begins (see modes below).

Supply Fan Sequence (Occupied)
The unit has been provided with a factory mounted variable frequency drive (VFD). The variable frequency drive shall control the supply fan speed as indicated by the following sequence:

Constant Volume:
The VFD shall be programmed from the factory for a constant supply fan speed. This is to be adjusted for air balancing only and is not to be modulated.

Outdoor Air Damper And Recirculated Air Damper Control (Occupied)
The outdoor air and recirculated air dampers are controlled by a single common modulating actuator and the recirculated air damper will operate inverse of the outdoor air damper. When de-energized the actuator will spring

return, closing the outdoor air damper and opening the recirculated air damper. The position of the dampers shall be controlled by the following sequence:

External 2-10 VDC Signal By Others
The dampers shall be controlled by an external 2-10 VDC signal (field provided and wired) landed to terminals in the unit control center (see unit wiring diagram for details). The external signal shall control the actuator directly and the microprocessor controller shall have no control or monitoring of the outdoor air and recirculated air damper positions.

Heating Control
The heating will be locked out when the outside air is above the heating lockout set point (65 F adj.). When enabled heating will be controlled as follows:

Indirect Gas Fired Heating
The microprocessor controller will modulate the indirect gas furnace to maintain the active supply temperature set point.

Unoccupied Mode (Cycle On Room Temp)
The unit will cycle to maintain unoccupied room set points. In the standby mode the unit will be in the following state:

- Supply Fan Is OFF
- Factory mounted and wired outdoor air and recirculated air damper actuator is de-energized.

Heating Control (Unoccupied)
Upon a call for heating (unoccupied heating room set point – hysteresis, 55 F - 3 F = 52 F) unit operation is as follows:

- Supply Fan Cycles ON
- The supply temperature is elevated to the maximum reset limit (adj.) to heat the space
- The recirculated air damper is opened and the outside air damper is closed.
- The unit cycles off when room temperature reaches the unoccupied heating room set point (65 F adj.)

Morning WarmUp/Cool Down
Prior to occupancy, the unit will run using the warmup or cool down sequence until the occupied set point is achevied. The heating or cooling mode must not be locked out and the space temperature is bleow or above setpoint by the unoccupied hysteresis (adj.). (This Sequence must be field configured.)

- The recirculated air damper is opened and the outise air damper is closed.

Supply Air Low Limit
If the supply air temperature drops below 35 F (adj.) for 300 seconds (adj.), the controller will de-energize the unit and generate an alarm.

Alarm Management
The microprocessor controller will monitor the unit status for alarm conditions. Upon detecting an alarm, the controller will record the alarm description, time, date, available temperatures, and unit status for user review. A digital output is reserved for remote alarm indication.

Alarms are also communicated to the Building Management System (BMS).

Possible Alarms Include:

- **Global Alarm**
  Indication that one or more alarms are present.
- **Outdoor Air Inlet Temperature Sensor Alarm**
  Outdoor Air Inlet Temperature Sensor Alarm: Failure of the outdoor air inlet temperature sensor.
- **Supply Air Discharge Temperature Sensor Alarm**
  Failure of the supply air discharge temperature sensor. Unit is shut down.

GREENHECK
Building Value in Air.

Cut Sheet - Not for Submittal
Printed Date: 04/07/2026
Mark: MAU
Model: IGX-P122-H22-MF-N

- **Supply Air Low Limit Alarm**
  Supply air has fallen below 35 F (adj.) for 300 seconds (adj.). Unit is shut down.
- **Dirty Filter Alarm**
  Indicates the pressure across the filters has increased above the dirty filter pressure switch setting (field adjustable)
- **Indirect Gas Furnace Alarms**
  The indirect gas furnace operation is monitored for a variety of alarm conditions.
- **Supply Fan Alarm**
  Indicates the supply fan failed to prove for a 30 second (adj.) period.

GREENHECK
Building Value in Air.

Cut Sheet - Not for Submittal
Printed Date: 04/07/2026
Mark: MAU
Model: IGX-P122-H22-MF-N

Warranty Statement for Make-Up Air

Unit Warranty

Greenheck warrants the equipment to be free from defects in material and workmanship for a period of 18 months from the date of shipment. Initial startup must be completed within six months of the shipment date, and a startup report must be submitted to Greenheck.

Warranty Notes

Any component which proves defective during the warranty period will be repaired or replaced at Greenheck's sole option when returned to our factory, transportation prepaid. All warranties do not include labor costs associated with troubleshooting, removal, or installation. Greenheck will not be liable for any consequential, punitive, or incidental damages resulting from use, repair, or operation of any Greenheck product. These warranties are exclusive and are in lieu of all other warranties, whether written, oral, or implied, including the warranty of merchantability and the warranty of fitness for a particular purpose. No person (including any agent or salesperson) has authority to expand Seller's obligation beyond the terms of this warranty, or to state that the performance of the product is other than that published by Seller.

As a result of our commitment to continuous improvement, Greenheck reserves the right to change specifications without notice.

GREENHECK
Building Value in Air.

Cut Sheet - Not for Submittal
Printed Date: 04/07/2026
Mark: DCV-1
Model: GKC-DCV-S-21-2-1-0

Variable Volume

Greenheck Kitchen Controls

Standard Construction Features:

Includes control system, VFDs (unless otherwise stated), Temperature Sensors, Touchscreen. IMC 507.1.1 compliant. UL/ULC Listed.

Options & Accessories:

Mounting Option	Left Cabinet on KH-1
Exhaust Fan Quantity	2
Supply Fan Quantity	1
Hood Light Control	Yes
User Interface	Full Color Touchscreen
Touchscreen Mounting Location	Utility Cabinet - Left End of Hood - Left Cabinet on KH-1
Additional Fire Contacts	Additional set of dry contacts (2 NO, 2 NC Total)
Exhaust During Fire	Exhaust fans will run at max speed when in fire mode
Gas Reset	Provides power and control for a fire system electric gas valve

Controlled Fans:

Fan Mark	Fan Type	Supplied By	Phase	HP	Voltage	NEC FLA	Starter/VFD Required	Starter/VFD Provided
KEF-1	Exhaust	Manufacturer	3	1	460	2.1	Yes	Yes
KEF-2	Exhaust	Manufacturer	3	2	460	3.4	Yes	Yes
MAU-1	Supply	Others	3	3	460	4.8	Yes	No

Controlled Hood Sections and Fan Relationships:

KH-1 Section - Number of Sensors = 1	
	Exhaust Fan Name - KEF-1
	Supply Fan Name - MAU-1
KH-1 Section - Number of Sensors = 1	
	Exhaust Fan Name - KEF-2
	Supply Fan Name - MAU-1

GREENHECK
Building Value in Air.

Cut Sheet - Not for Submittal
Printed Date: 04/07/2026
Mark: DCV-1
Model: GKC-DCV-S-21-2-1-0

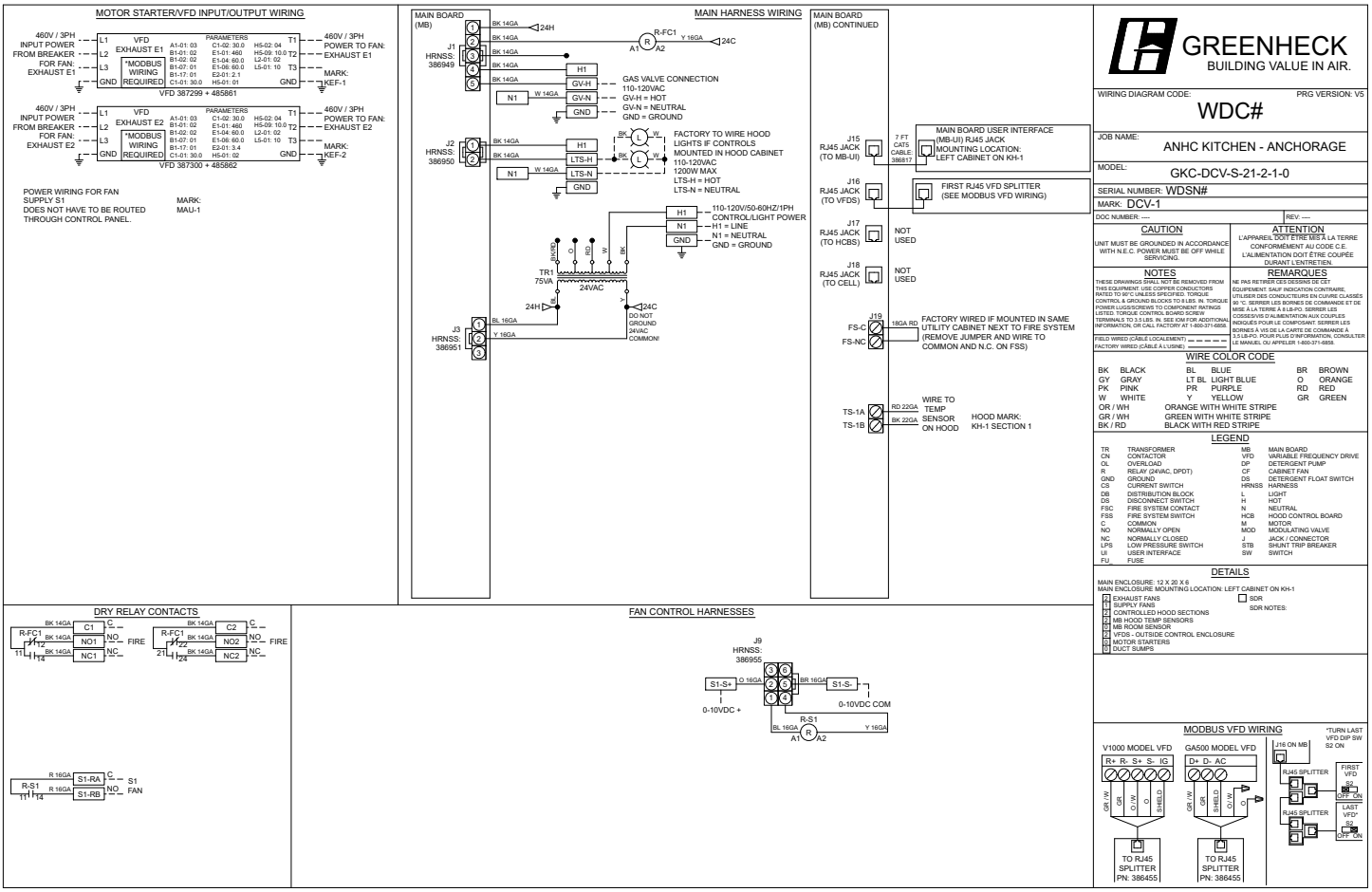

GREENHECK
Building Value in Air.

Cut Sheet - Not for Submittal
Printed Date: 04/07/2026
Mark: DCV-1
Model: GKC-DCV-S-21-2-1-0

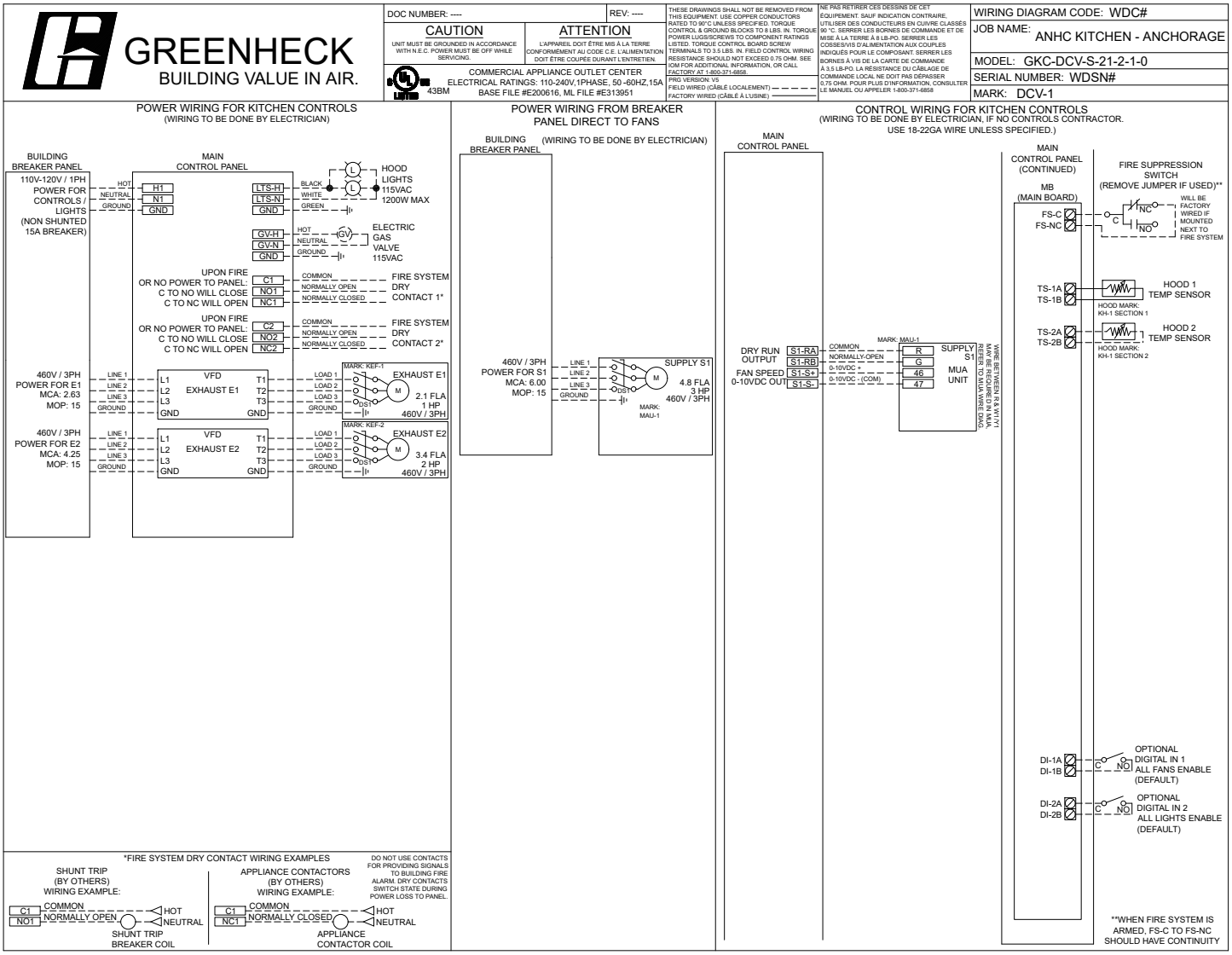

CMA
RESTAURANT SUPPLY & DESIGN, INC.

Submittal Sheet

04/21/2026

ITEM# 78 - SS FLUTED WALL FLASHING (1 EA REQ'D)

Pacific Stainless

STAINLESS STEEL WALL FLASHING FLUTED TO BE FULL HEIGHT FROM TOP OF COVED BASE TO THE BOTTOM OF THE HOOD AND TO EXTEND 18" BEYOND THE HOOD.

<Incomplete>

Description: SS FLUTED WALL FLASHING

Notes: STAINLESS STEEL WALL FLASHING FLUTED TO BE FULL HEIGHT FROM TOP OF COVED BASE TO THE BOTTOM OF THE HOOD AND TO EXTEND 18" BEYOND THE HOOD.

CMA
RESTAURANT SUPPLY & DESIGN, INC.

Submittal Sheet

04/21/2026

ITEM# 79 - EXHAUST FAN (2 EA REQ'D)

Greenhck

DIRECT DRIVE UPBLAST CENTRIFUGAL ROOF EXHAUST FAN

<Incomplete>

Description: EXHAUST FAN

Notes: DIRECT DRIVE UPBLAST CENTRIFUGAL ROOF EXHAUST FAN

CMA
RESTAURANT SUPPLY & DESIGN, INC.

Submittal Sheet

04/21/2026

ITEM# 80 - EXHAUST CURB (2 EA REQ'D)

Greenhck

EXHAUST CURB TO BE ROOFED IN BY CONTRACTOR FOR THE EXHAUST FANS TO SIT ON.

<Incomplete>

Description: EXHAUST CURB

Notes: EXHAUST CURB TO BE ROOFED IN BY CONTRACTOR FOR THE EXHAUST FANS TO SIT ON.

CMA
RESTAURANT SUPPLY & DESIGN, INC.

Submittal Sheet

04/21/2026

ITEM# 81 - CLASS 1 EXHAUST DUCTWORK (1 EA REQ'D)

GC

TO BE SUPPLIED AND INSTALLED BY THE HVAC CONTRACTOR. NOT IN CMA CONTRACT.

Description: CLASS 1 EXHAUST DUCTWORK

Notes: TO BE SUPPLIED AND INSTALLED BY THE HVAC CONTRACTOR. NOT IN CMA CONTRACT.

CMA
RESTAURANT SUPPLY & DESIGN, INC.

Submittal Sheet

04/21/2026

ITEM# 82 - MAKE UP AIR / CONDITIONING UNIT (1 EA REQ'D)

Greenhck

MAKE UP AIR / CONDITIONING AIR UNIT.

Description: MAKE UP AIR / CONDITIONING UNIT

Notes: MAKE UP AIR / CONDITIONING AIR UNIT.

CMA
RESTAURANT SUPPLY & DESIGN, INC.

Submittal Sheet

04/21/2026

ITEM# 83 - MAKE UP AIR DUCTWORK (1 EA REQ'D)

GC

MAKE UP AIR DUCTWORK TO BE SUPPLIED AND INSTALLED BY THE GENERAL CONTRACTOR

Description: MAKE UP AIR DUCTWORK

Notes: MAKE UP AIR DUCTWORK TO BE SUPPLIED AND INSTALLED BY THE GENERAL CONTRACTOR

CMA
RESTAURANT SUPPLY & DESIGN, INC.

Submittal Sheet

04/21/2026

ITEM# 84 - FIRE SUPPRESSION SYSTEM (1 EA REQ'D)

GC

FIRE SUPPRESSION SYSTEM TO BE INSTALLED AND SUPPLIED BY THE GENERAL CONTRACTOR.

Description: FIRE SUPPRESSION SYSTEM

Notes: FIRE SUPPRESSION SYSTEM TO BE INSTALLED AND SUPPLIED BY THE GENERAL CONTRACTOR.

CMA
RESTAURANT SUPPLY & DESIGN, INC.

Submittal Sheet

04/21/2026

ITEM# 85 - ELECTRIC GAS SHUT OFF VALVE (1 EA REQ'D)

GC

TO BE SUPPLIED AND INSTALLED BY THE GENERAL CONTRACTOR

Description: ELECTRIC GAS SHUT OFF VALVE

Notes: TO BE SUPPLIED AND INSTALLED BY THE GENERAL CONTRACTOR

CMA
RESTAURANT SUPPLY & DESIGN, INC.

Submittal Sheet

04/21/2026

ITEM# 86 - HOOD SYSTEM CONTROLS (1 EA REQ'D)

Greenhck

SURFACE MOUNT HOOD CONTROL BOX

Description: HOOD SYSTEM CONTROLS

Notes: SURFACE MOUNT HOOD CONTROL BOX

CMA RESTAURANT SUPPLY & DESIGN, INC.

Submittal Sheet

04/21/2026

ITEM# 87 - COMBI OVEN, GAS (1 EA REQ'D)

UNOX USA XAVC-06FS-GPLM

ChefTop MIND.Maps™ Plus Combi Oven/Steam Oven is a gas countertop oven that combines heat, hot air flow and steam. (6) 18" x 26" full size sheet or (12) hotel size pan capacity, MIND.Maps™ technology, programmable menu, 2-11/16" shelf spacing, glass door, left-to-right door opening, stainless steel interior & exterior, WIFI/USB for data transfer to HACCP software, 1kW, 8 amps, 120v/60/1-ph, cETLus, NSF, ENERGY STAR® (cooking chamber built from 316L stainless steel)
(For safety and reliability purposes, CHEFTOP MIND.Maps™ Gas ovens (Free Standing and Countertop Models) must be equipped with only UNOX brand casters with safety chains),Gas lines is not included with the oven and must be purchased separately. Ovens come standard with rack slides for sheet pans.

ACCESSORIES

Mfr	Qty	Model	Spec
UNOX USA	1	INSTALL FORM	End User Data & Installation Confirmation Form
UNOX USA	1		2 Year parts and 1 year labor warranty standard
UNOX USA	1	LL4-2	Long.Life 4 years warranty/10,000 working hours on parts and 2 years labor
UNOX USA	1		Natural gas
UNOX USA	1	XUC003	Installation Kit for ChefTop MIND.Maps™ Plus, includes water drain fittings & U-trap, for single ovens (Installation kit parts are included in stacking kit)
UNOX USA	1	XAAQC-00E2-G	Stacking Kit for ChefTop MIND.Maps™ Plus, includes installation kits and stacking parts for stacking two ovens, for gas ovens including floor stand (XWARC-00-EF-F) and casters (XUC012)
UNOX USA	1	INSTALL-ST	Install Stacking Charge
UNOX USA	1		It is the sole responsibility of the owner/operator/purchaser of this equipment to verify that the incoming water supply is comprehensively tested (Free Chlorine, Chloramine, TDS (Total Dissolved Solids), Silica, pH, TH (Total Hardness), Chlorides & Alkalinity) & if required, provide a means of water treatmeant that would meet the minimum requirements of the manufacturer's water quality standards as outlined on the product spec sheet. Non-compliance with these minimum standards will potentially damage this equipment and/or components & VOID the original equipment manufacturer's warranty
UNOX USA	1	USXHC001	QT1+CR, QT Water Filter System, dual, (1) 10" CTO-Q10 cartridge & (1) 15" CTO-QCR cartridge, 20,000 gallon capacity, 2.5 gpm flow rate, reduces chlorine, taste & odor - 6,000 gallon capacity, 0.5 gpm, reduces chloramine, 0.5 micron particulate.
UNOX USA	1	INSTALL-WF	Install Unox Finest/Pentair® Base

UNOX USA	1	DB1018A0	UNOX Detergent & Rinse Eco, (10) 1 liter bottles, double concentrate, phosphate-free, cleaning chemicals for Rotor. Klean™ (There is a hazardous shipping charge for detergents)
UNOX USA	1	DB1076A0	Detergent & Rinse Ultra Plus, (10) 1 liter bottles, cleaning chemicals for CHEFTOP MIND.Maps™, SPEED-X™, CHEFTOP-X™ ovens. (There is a hazardous shipping charge for detergents) (10 each per case)

XAVC-06FS-GPLM

Project _____
Item _____
Quantity _____
Date _____

Model
CHEFTOP MIND.Maps™ PLUS COUNTERTOP

- Combi steamer
- Gas
- 6 trays 18"x26"
- Hinge on the right side (Left Hand Door)
- 9.5" Touch control panel



DESCRIPTION

Technologically advanced combi oven for gastronomy cooking processes (dehydrating, steaming, low temperature cooking, sous vide cooking, roasting, grilling, pan frying, regeneration and plate regeneration) and for fresh or frozen baking thanks to Unox Intensive Cooking and Intelligence Performance technologies which guarantee perfect results and repeatability for any load size. Automatic management of cooking processes (CHEFUNOX) for perfect results even without trained staff.

STANDARD COOKING FEATURES

Programs

- **1000+** Programs
- **CHEFUNOX:** choose something to cook from the library and the oven will automatically set all the parameters
- **MULTI.TIME:** manages up to 10 cooking processes at the same time
- **MISE.EN.PLACE:** synchronises the insertion of pans so that all the dishes are ready at the same time
- **MIND.Maps™:** draw the cooking processes directly on the display
- **READY.COOK:** ready to use settings with infinite time for a quick start

Manual cooking

- **Temperature:** 86 °F – 500 °F
- Up to 9 cooking steps
- **CLIMA.Control:** humidity or dry air set by 10%
- Delta T cooking with core probe
- SOUS-VIDE cooking
- 4-speed fan system

STANDARD TECHNICAL FEATURES

- **ROTOR.Klean™:** automatic washing system
- Automatic special washing behind the fan guard
- Cooking chamber in high-resistance AISI 316L stainless steel with rounded edges
- Triple glass
- Cooking chamber lighting through LED lights embedded in the door
- Tray supports with anti-tip system
- Drip collection system integrated in the door which works even when the door is open
- High-performance heating elements
- Integrated DET&Rinse™ detergent container
- Integrated Wi-Fi
- **Wi-Fi / USB data:** download/upload HACCP data
- **Wi-Fi / USB data:** download/upload programs
- Fully integrated drain cooling valve (drain discharge temp. ≤ 140°F)

ADVANCED AND AUTOMATIC COOKING FEATURES

Data Driven Cooking

- Control and monitor the operating conditions of your ovens in real-time, create and share new recipes. The AI transforms the consumption data into useful information in order to increase your daily profit. Create, understand, improve

Unox Intelligent Performance

- **ADAPTIVE.Cooking™:** automatically regulates the cooking parameters to ensure repeatable results
- **CLIMALUX™:** total control of the humidity in the cooking chamber
- **SMART.Preheating:** automatically sets the preheating temperature and duration
- **AUTO.Soft:** manages the heat rise to make it more delicate
- **SENSE.Klean:** estimates how dirty the oven is and suggests the appropriate automatic washing cycle

Unox Intensive Cooking

- **DRY.Maxi™:** rapidly extracts the humidity from the cooking chamber
- **STEAM.Maxi™:** produces saturated steam
- **AIR.Maxi™:** manage fans auto-reverse and pulse function
- **PRESSURE.Steam:** increases the steam saturation and temperature

APP & WEB SERVICES

- Data Driven Cooking app & webapp
- Top Training app
- Combi guru app

XAVC-06FS-GPLM

Views
Connection positions
Dimensions and Weight

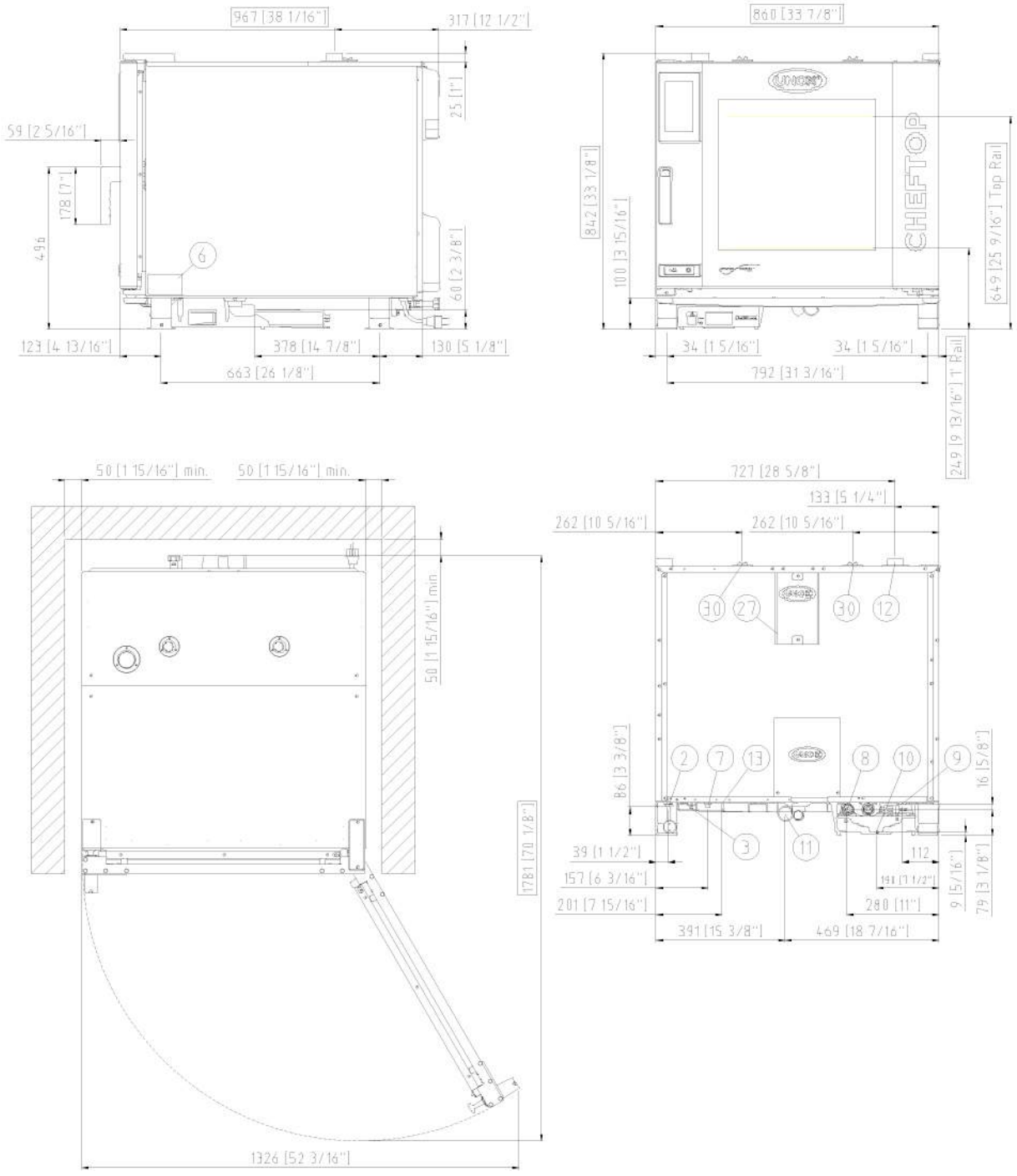

DIMENSIONS AND WEIGHT

Width	33-7/8"	860 mm
Depth	38-1/16"	967 mm
Height	33-1/8"	842 mm
Net Weight	287 lbs	130 kg
Tray pitch	3-1/8"	80 mm

CONNECTION POSITIONS

2	Power cord	**10**	Rotor.KLEAN™ inlet
3	Unipotential terminal	**11**	Chamber drain pipe
7	Safety thermostat	**12**	Hot fumes exhaust chimney
6	Technical data plate	**13**	Accessories connection
8	3/4" female NPT water inlet	**27**	Cooling air outlet
9	3/4" Gas inlet	**30**	Combustion gasses exhaust

XAVC-06FS-GPLM

Power and gas supply
Water connections
Installation requirements
Accessories

POWER AND GAS SUPPLY

STANDARD

Voltage	120 V
Phase	~1PH+N+PE
Frequency	60 Hz
Total power	1 kW
Maximum Amp Draw	8 A
Required breaker size	15 A
Power cable requirements*	3 x AWG 14
Cord size*	0.39 in
Plug	NEMA 5-20P

*Recommended size - observe local ordinance

GAS

Gas type	NG	LPG
Nominal gas power	81892 BTU/h	81892 BTU/h
Inlet pressure	Min. 3.5 i.w.c. Max 10.5 i.w.c.	Min. 8.0 i.w.c. Max 13.0 i.w.c.
Gas valve orifice	-	2-11/64"
Gas hook-up	3/4" female NPT	3/4" female NPT

WATER SUPPLY

USING A WATER SUPPLY THAT DOES NOT MEET UNOX'S MINIMUM WATER QUALITY STANDARDS WILL VOID ANY WARRANTY.

It is the responsibility of the purchaser to ensure that the incoming water supply is compliant with the listed specifications through adequate treatment measures.

Line pressure:	Drinking water inlet: 3/4" NPT*, line pressure: 22 to 87 psi; 1.5 to 6 Bar (29 psi; 2 Bar recommended)

Inflow water specifications

Free chlorine	≤ 0.5 ppm
Chloramine	≤ 0.1 ppm
pH	7 - 8.5
Electrical conductivity	≤ 1000 µS/cm
Total hardness	≤ 30 °dH

Steam circuit: inflow water specifications

Total hardness	≤ 8 °dH*
Chlorides	≤ 250 ppm

*this value refers to daily steam cooking of 1- 2 hours. In any case, if with a total hardness ≤ 8°dH there is still production of limescale, it is mandatory to treat the water in order to avoid limescale production. We recommend water treatment systems based on ion exchange resins. Water treatment systems based on polyphosphates are not allowed.

ACCESSORIES

- **SMART.Drain:** its functioning is based on a special two-way valve that collects any fat and cooking liquids created during the cooking program and drains them into a tank
- **LIEVOX:** Proofer equipped with sensors capable to control and intervene automatically on the leavening process
- **Neutral cabinet:** recommended solution to optimize your kitchen layout and always have everything in the right place
- **Stand:** the multifunctional support ideal for storing trays safely and placing your oven at the perfect height to work
- **Cooking Essentials:** special trays
- **DET&Rinse™ PLUS:** cleaning and rinse agents to combine maximum cleanliness with minimum consumption and long life for your oven
- **DET&Rinse™ ECO:** eco formula for daily cleaning and the utmost respect for the environment. Ideal for mild level of dirt.
- **FINEST:** resin-based filtering system that eliminates from the water all substances that contribute to the formation of limescale inside the oven cooking chamber
- **SOUS-VIDE:** Core probe
- Ethernet connection kit
- **HYPER.Smoker:** smoker box for wood chips and sawdust to smoke inside the cooking chamber without extra electrical supply

INSTALLATION REQUIREMENTS

Installations must comply with all local electrical systems, particularly as for minimum wire gauge required for field connection, hydraulic and ventilation supply. Exhaust and fume analysis must be performed in case of gas ovens.

Register to access data and product specifications
infonet.unox.com

End User Data & Installation Confirmation

To ensure proper product registration, Installation, and technical support, UNOX, INC must obtain the following information, upon order placement, concerning the end user of the equipment. Shipment will be delayed if this form is not returned to the Orders Team at orders.usa@unox.com. **This form can be completed by the Equipment Dealer or End User.**

For multiple locations, please complete an End User form for every single one. Failure to provide specific locations information will result in installation delays and additional charges.

Please return completed form to UNOX, Inc. with purchase order

Name of the Business : _____ Business Phone Number : _____

Street Address : _____ City, State and Zip Code : _____

Contact Name : _____ Contact Phone Number : _____

New Construction? YES ☐ NO ☐ Contact Email : _____

Equipment Dealer Name : _____ Dealer PO Number : _____

Please select the appropriate box below:

Purchased UNOX START-UP

☐ We have purchased UNOX equipment (with or without PREBUILT option) for the above end user location and have also purchased the optional UNOX START-UP service. We confirm that unit receipt, placement, and connection to all required utilities will be performed by competent persons in accordance with appropriate UNOX installation manual and equipment specification document. We understand the following:

1. Installation activities must be performed prior to scheduled arrival of UNOX authorized start-up technician.
2. Technical assistance is available from UNOX, Inc. via telephone at (800) 489-8669 or e-mail at service.usa@unox.com.
3. UNOX START-UP includes a single visit to perform inspection of unit for proper mechanical connections (Mechanical, in this definition, refers to gas, water, electric, drain, and ventilation), clearances, service access, positioning, leveling of equipment, and connection to properly configured internet (Wi-Fi or Ethernet) service.
4. UNOX start-up technician will perform humidity and gas system (for gas units only) calibration as well as operational performance test.
5. All work will be documented, and operational checklist completed by UNOX START-UP technician.
6. All costs related to delays caused by improperly installed equipment or work performed by UNOX START-UP technician to rectify improper installation are the responsibility of the equipment dealer or end customer.
7. Start-Up requests must be received at least ten (10) business days prior to desired date of service to allow for scheduling.

Estimated Date site ready for Start-Up _____

☐ **Decline Certified Installation and START-UP**

We have purchased UNOX equipment (with or without PREBUILT option) for the above end user location and have declined the UNOX Certified Installation and the UNOX START-UP service. We confirm that unit receipt, placement, connection to utilities, start-up, and calibration will be performed by competent persons. We understand the following:

1. We understand that by declining the UNOX installation or START-UP services, UNOX, Inc. will not cover warranty service calls related to improper installation.
2. We understand that an Installation Manual is included with every new UNOX oven and that an electronic version of the manual is available by contacting UNOX at (800) 489-8669.
3. We understand that all UNOX equipment must be installed by qualified appliance installers.
4. We understand that all UNOX ovens require calibration at the installation site prior to unit operation. This calibration must be performed by a qualified technician and for gas equipment, requires the use of a gas combustion analyzer. This service is not provided by UNOX unless installation or start-up service is purchased. Customers who choose not to purchase these services are responsible for ensuring equipment is installed properly and calibrated by a qualified technician.

☐ **Purchased Certified Installation**

We have purchased UNOX Certified Installation for the above end user location. The UNOX Certified Installation information sheet has been received and we fully understand what is included with the standard installation. We further acknowledge the following:

1. The site inspection and installation requests must be received at least ten (10) business days prior to desired date of service to allow for scheduling.
2. We understand that all UNOX equipment must be installed by qualified appliance installers.
3. We understand that all gas powered UNOX ovens require calibration at the installation site prior to unit operation. This calibration must be performed by a qualified gas technician and requires the use of a gas combustion analyzer. This service will be performed by the UNOX installer at the time of installation.

Estimated date site ready for pre-installation inspection: _____ **Estimated Installation date:** _____

Preferred Authorized UNOX Service Agent Name: _____

☐ **Purchased Long.Life 4 or Long.Life 5**

We have purchased UNOX LONG.Life 4 or LONG.Life 5 extended warranty and understand the following:

1. UNOX LONG.Life 4 and LONG.Life 5 include a labor and parts warranty extension for the oven only and do not include warranty extension for accessories, care items, or cooking essentials purchased with the oven.
2. LONG.Life 4 and LONG.Life 5 warranty extensions require that covered equipment is connected to UNOX via an Internet connection within 30 days of installation.
3. UNOX, Inc. warranty terms and conditions are outlined in the UNOX, Inc. warranty policy.
4. We acknowledge receipt of the UNOX Warranty policy.

PREBUILT Oven Accessory Placement

This section is for equipment orders that include the UNOX PREBUILT-1 or PREBUILT-2 configuration and have also purchased heat shields and/or water filters. If multiple columns are ordered and different Heatshield and/or Water Filter configurations are required, please communicate differences in additional information section below.

PREBUILT-1 Configurations: (Note, Heat shields and water filters cannot be installed on same side of oven.)

PREBUILT-1 (Oven on stand)

Heatshield:

- ☐ Install Heat Shield on Left side of Oven
- ☐ Install Heat Shield on Right of Oven

Water Filter:

- ◯ Install Water Filter on back of oven stand (Standard)
- ◯ Install Water Filter on Left side of Oven
- ◯ Install Water Filter on Right of Oven
- ◯ Do not install water filter on oven, I/We will attach to wall behind oven placement.

PREBUILT-2 (Stacked Ovens)

Heatshield:

- ☐ Install Heat Shield on Left side of Oven Column
- ☐ Install Heat Shield on Right side of Oven Column

Water Filter:

- ◯ Install Water Filter on Left side of Oven (Standard)
- ◯ Install Water Filter on Right of Oven
- ◯ Do not install water filter on oven, I/We will attach to wall behind oven placemen

Additional information:

Name : _____ Title : _____

Signature : _____ Date : _____

OptiPure

Model: QT1+CR
Part #: 170-52080

ITEM #: _____ **QTY:** _____

JOB NAME/NUMBER: _____

Snapshot

The **QT1+CR** is a dual-cartridge water treatment system with two Qwik-Twist cartridges, which reduce sediment down to 0.5-microns, and reduce chlorine, taste and odor at a flow rate of 2.5 gpm for 20,000-gallons and chloramine at a flow rate of 0.5 gpm for up to 6,000-gallons.



System Benefits

- Reduces maintenance frequency and cost, and extends equipment life.
- Gradient-density depth filtration reduces dirt, rust, and other debris to assure clean, clear water for steam generation.
- CTO-Q10 cartridge - Activated carbon filtration protects equipment against corrosive chlorine.
- CTO-QCR cartridge - Catalytic carbon provides added protection against chloramines when present in water supplies.
- New manifold design provides fewer possible leak points.
- Sturdy, powder-coated mounting bracket and multi-function valve simplify installation.
- Multi-function valve provides:
    * Shutoff valve for quick and simple filter replacements
    * System bypass valve for easy system maintenance
    * Flush port to flush cartridges after installation
- Built-in pressure gauge allows visual monitoring of when filters need to be changed.
- Utilizes Qwik-Twist cartridges that make changing filters quick, easy and sanitary.

Application

STEAM & COMBI OVENS - For the reduction of chloramines, chlorine and sediment.

Installation Tips

- Feed-water connection to system should be COLD only.
- Do not exceed system specifications for temperature and pressure.
- Allow 3" clearance below system for filter cartridge removal and cartridge replacement.
- To be used for treated water connection only.
- Detailed installation, operation and maintenance manual included with each system.
- No activation procedure or flushing required for system to perform as specified.

OptiPure

Model: QT1+CR
Part #: 170-52080



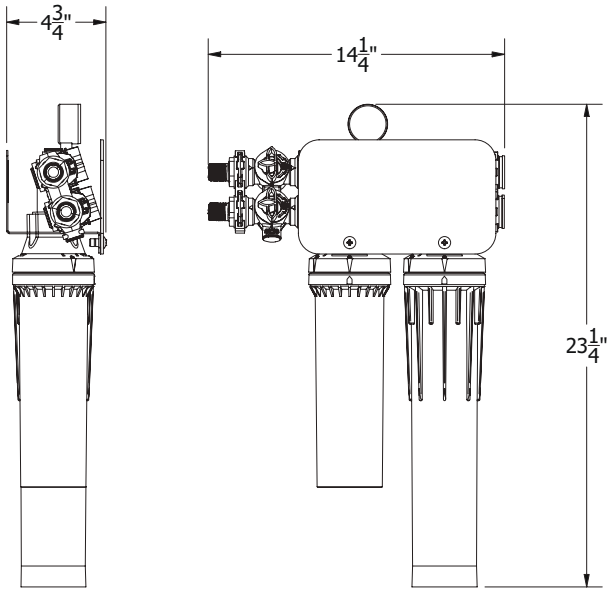

WARNING:
Cancer and Reproductive Harm - www.P65Warnings.ca.gov.

Specifications

System	
Dimensions (Height x Width x Depth, Inches)	23 ¼" x 14 ¼" x 4 ¾"
Connection - Inlet & Outlet	½" MNPT
Operating Pressure Range	10 - 125 psi (0.7 - 8.6 bar)
Inlet Water Temperature Range	35° - 100°F (2° - 38°C)
Shipping Weight	9 lbs.
Performance	
Chlorine Reduction Capacity	20,000 gals. (75,708 L)
Chloramine Reduction Capacity	6,000 gals. (22,712 L)
Service Flow Rate	2.5 gpm (9.5 lpm)
Sediment Reduction	0.5 microns (nominal)

Replacement Media

Model	Description	Part Number	Qty
CTO-Q10	Pre/Post-Filter	300-05828	1
CTO-QCR	Chloramine Filter	300-05831	1

Options

Model	Description	Part Number
Fitting Kit	½" PTC Fitting Kit	575-92272

Warranty

All system components and assembly except for filter cartridges, separation membranes, permeate pumps, electric motors, diaphragm pumps, and rotary vane pumps shall be warranted against defects in workmanship for a period of 60 months from the date of original shipment. For complete warranty information, contact OptiPure customer service or go to www.optipurewater.com.

Dealer/Distributor Info:

It is recommended that pre/post-filters and mineral addition cartridges are changed every 6 months, when capacity is reached or when feedwater pressure or flow becomes inadequate.

Membrane life varies depending on feedwater conditions and pre-filter maintenance. It is 12-18 months under typical conditions, but it can be as long as 3-5 years.

This product is for commercial use only and must be installed and maintained according to manufacturer's guidelines.

Do not use on water that is microbiologically unsafe or of unknown quality without adequate disinfection before or after the system.

OptiPure, A Division of Aquion, Inc.
101 S. Gary Ave., Suite A
Roselle, IL 60172
p: 972.881.9797 e: info@optipure.net
www.optipurewater.com

QT1+CR_Spec_R1
042719

CMA RESTAURANT SUPPLY & DESIGN, INC.

Submittal Sheet

04/21/2026

ITEM# 88 - KETTLE, GAS, TILTING (1 EA REQ'D)

Cleveland KGL25T

Kettle, gas, manual tilting, 25-gallon capacity, 2/3 steam jacket design, electronic spark ignition, solid-state control panel, floor mounted control console supports, 304 stainless steel construction with 316 series stainless steel liner, flanged feet, 50 psi rating, cover & draw-off optional, 90,000 BTU, CE

ACCESSORIES

Mfr	Qty	Model	Spec
Cleveland	1		1-year parts & labor warranty, standard
Cleveland	1	PERFORMANCE START-UP	Performance start-up included at customer request after equipment is installed (free water quality check included) (mileage capped at 100 miles round trip) (contact Cleveland sales representative for details)
Cleveland	1		New construction
Cleveland	1		Natural Gas
Cleveland	1		120v/60/1-ph, 5.0 amps, electronic spark ignition, cord & plug for controls, standard
Cleveland	1	TD2	2" tangent draw-off valve with strainer
Cleveland	1	DS2	Perforated Drain Strainer, 2" draw-off, 3/16" strainer holes
Cleveland	1	DPK26	Double Pantry Faucet And Bracket Kit (KGL25T)
Cleveland	1	INSTWATER	2 x ¾" Female 6 ft Garden Hoses, 2 x ½" Male NPT to ¾" Male Garden Hose NPT Fittings
Cleveland	1	KAK	Kettle Accessory Kit includes: clean-up brush, 36" kettle paddle, stainless steel kettle whip, 36" nylon kettle brush, nylon draw-off brush, & 18" stainless steel 24 oz kettle ladle
T&S Brass	1	HG-4D-48SK	Safe-T-Link Gas Connector Kit, 3/4" connection, 48" hose, stainless steel braiding with extruded coating, (1) Quick-Disconnect, (2) Swivelink fittings, (1) 90° elbow, ball valve, restraining cable adjustable for 3' to 5', 180,000 BTU / hr minium flow capacity

Cleveland

LEG TYPE, GAS-FIRED KETTLES

TILTING, 2/3 STEAM JACKETED "SPLASH PROOF SERIES"
25 GALLONS (100 LITERS)

Project _____
Item _____
Quantity _____
FCSI Section 11400 _____
Approved _____
Date _____

Models

- KGL-25-T



Shown with classic controls, optional Spring Assisted Cover and 2" Tangent Draw-Off Valve

Short Form Specifications

Shall be CLEVELAND, Gas Kettle, self-contained, tilting, Model KGL-25-T; 25 gallons, natural or LP gas, 2/3 Steam Jacketed, Type 316 Stainless Steel Interior. Jacket rated at 50psi with Safety Valve. Complete with "Splash-Proof" Solid-State Water Level, Temperature, and Safety Low Water Power Cut-Off, including L.E.D. Indicators for Heat Cycle and Low Water Warning.

Standard Features

- Self-contained gas tilting kettle is easily installed, only needs a gas connection and a 115 volt outlet.
- Accurate, "Splash Proof", consistant solid state temperature controls - less than ±1°C variance (ideal for simmering). Operating temperature range from 145° - 260°F (63°C - 127°C)

Standard Control Panel includes:

- LED indicator for heat cycle • LED indicator for low water
- Power ON/OFF Dial with 1-10 Temperature Dial Setting

easyDial Control Panel (optional) includes:

- Adjustable Temperature Control (C&F) • 99 Minute Adjustable Timer Setting • 3 Cooking Models, Cook/Simmer, Cook/On, Cook Off • 6-Built In Self Diagnostics & Display Readout • Core Temperature Probe (Optional)Indicators for Heat Cycle and Low Water Warning.

- Kettle and all exterior surfaces are a 316 Stainless Steel with a #4 finish.
- Energy efficient (65%), high performance gas-fired heating system for fast heat-up and recovery time:
- Twenty-five gallon model with 90,000 BTU firing rate and 58,500 BTU directly applied to the product.
- Supplied with Gas Pressure Regulator.
- Standard for natural gas operation.
- Large pouring lip for easier, faster, pouring. Heavy-duty Rolled Rim design provides strong reinforcement, prevents damages from abuse.
- "Splash-Proof" rear-mounted pressure/vacuum gauge.
- Steam jacket permanently filled with treated distilled water; venting and/or refilling is not required.
- 50 psi Steam Jacket Rating. Safety Valve mounted toward rear of kettle to avoid tampering.
- Automatic Electronic Spark Ignition System.
- Supplied with cord and plug for 115 volt controls.
- Tilt Mechanism of roller bearings and case hardened self-locking worm and segment gear.
- Support Legs with level adjustable feet, flanged for floor bolting.
- Typical approvals include AGA, CSA, CE, NSF and ASME.

Options & Accessories

- Propane Gas Option (LP)
- Kettle Markings (KM)
- Spring Assist Cover (CHS)
- Lift Off Cover (CL)
- Basket Strainer (BS and TBS)
- Measuring Strip (MS)
- Food Strainer (FS)
- Hot and cold water faucet (DPK), or cold water (SPK). Requires faucet bracket (FBKT)
- 2" Tangent Draw-Off Valve (TD2)
- Kettle Accessory Kit (KAK) includes:
  - Clean-up Brush (CB)
  - 36˝ Kettle Paddle (KP)
  - 36˝ Kettle Whip (KW)
  - 36˝ Kettle Brush
  - Draw-Off Brush (DB)
  - 24 oz. Ladle (KL)
- Correctional Packages
- easyDial option • Core Temperature Probe

KE004046-70

760 Beta Drive, Unit D
Mayfield Village, Ohio 44143

Tel 1.216.481.4900
Fax 1.216.481.3782
Email steam@clevelandrange.com

Timeless Quality, Trusted For Life ®

Cleveland

VALVE	A	B	C	D
WITHOUT	65	38 5/8	32 1/2	21 3/8
TDV-2	65	38 5/8	15	21 3/8
TDV-3	69	42 5/8	18 1/2	25 3/8

UNIT SHOWN WITH OPTIONAL TDV-2 OR 3, SPRING ASSIST COVER AND DOUBLE PANTRY FAUCET.

ALL DIMENSIONS ARE SHOWN IN INCHES.

OVERALL DEPTH	
DESCRIPTION	DIM `X'
KETTLE WITH TDV-2	37
KETTLE WITHOUT TDV-2 TILT HANDLE ON	**32 1/2**
FOR PASSING THROUGH NARROW DOORS	
✻ KETTLE WITH TDV-2 STEM & REAR FEET REMOVED	32 1/2
✻ KETTLE WITHOUT TDV-2	31 1/2
✻ KETTLE WITHOUT TDV-2 & REAR FEET REMOVED	30

OVERALL DEPTH	
DESCRIPTION	DIM `X'
KETTLE WITH TDV-3	41
KETTLE WITHOUT TDV-3 TILT HANDLE ON	**32 1/2**
FOR PASSING THROUGH NARROW DOORS	
✻ KETTLE WITH TDV-3 STEM & REAR FEET REMOVED	37 1/2
✻ KETTLE WITHOUT TDV-3	31 1/2
✻ KETTLE WITHOUT TDV-3 & REAR FEET REMOVED	30

✻ TILT HANDLE REMOVED

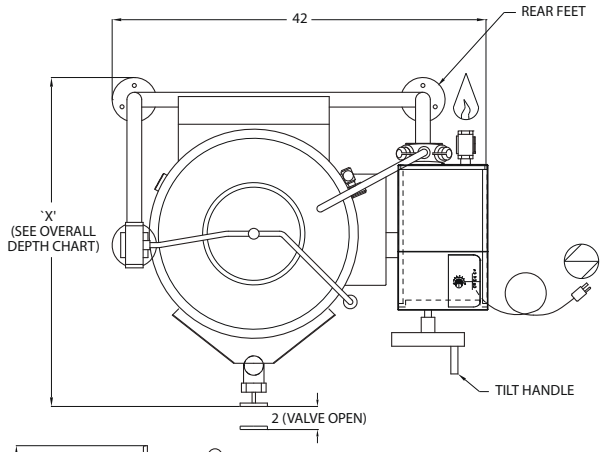

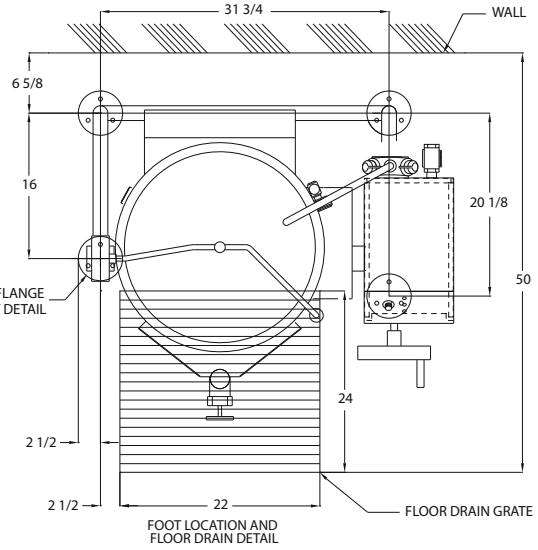

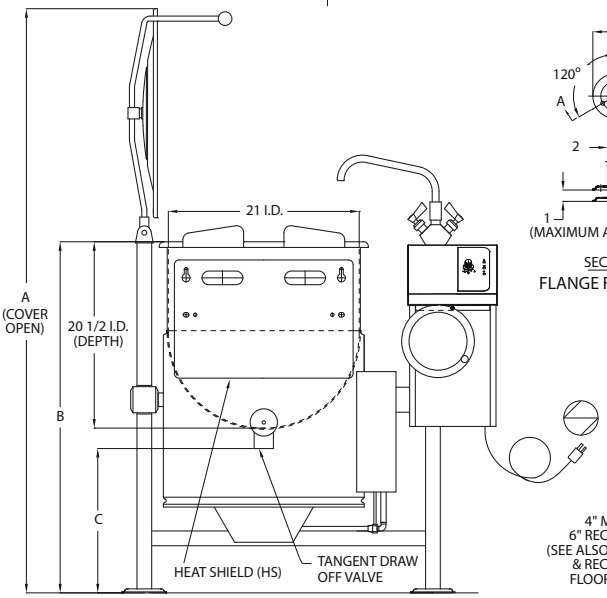

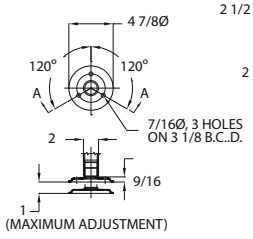

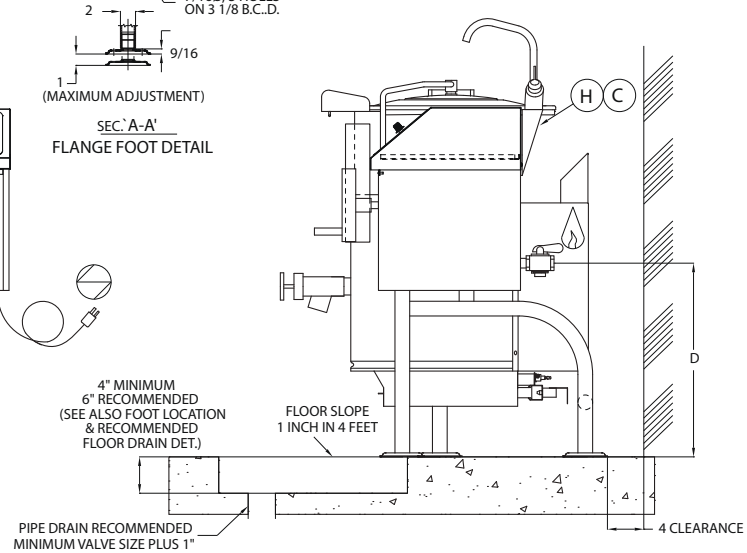

SPECIFICATIONS:

MODEL	ELECTRICAL SUPPLY:				GAS SUPPLY: (PIPING 3/4 NPT)					APPROVALS				CLEARANCE:	SHIPPING WEIGHT	Ⓒ COLD WATER: Ⓗ HOT WATER:
	VOLTS	PHASE	AMPS	FREQ	TYPE	BTU RATING	WATER COLUMN	BTU PER CU. FT.	SUPPLY PRESSURE	AGA	CGA	CE MARK	NSF			
KGL-25-T	120	1	5	60	NAT	90,000	4.2	1000	4" TO 14" W.C.	✓	✓		✓	RIGHT: 0 inches LEFT: 0 inches REAR: 4 inches ALLOW 12" SPACE MINIMUM ON RIGHT SIDE FOR SERVICE	320 LBS.	PIPING: 1/2" NPT (DOUBLE) PIPING: 3/8" COPPER TUBE (SINGLE)
	120	1	5	60	LP	90,000	10	2500	4" TO 14" W.C.	✓	✓		✓			
	220	1	3	60	NAT	90,000	4.2	1000	4" TO 14" W.C.				✓			
	220	1	3	60	LP	90,000	10	2500	4" TO 14" W.C.				✓			

- CAPACITIES: (in 4 oz. servings, other sizes may be calculated)
  25 gallons / 100 liters .... 426 servings

NOTES:
Cleveland Range reserves right of design improvement or modification, as warranted.
Many regional, state and local codes exist and it is the responsibility of the owner and installer to comply with the codes.
Cleveland Range equipment is built to comply with applicable standards for manufacturers. Included among those approval agencies are U.L/NSF#4 and CSA (AGA, CGA).

(NOT TO SCALE)

Gas Kettles

760 Beta Drive, Unit D
Mayfield Village, Ohio 44143

Tel 1.216.481.4900
Fax 1.216.481.3782
Email steam@clevelandrange.com

www.clevelandrange.com

Timeless Quality, Trusted For Life ®

Cleveland

DPK - Double Pantry Faucet
SPK - Single Pantry Faucet

Project _____
Item _____
Quantity _____
FCSI Section 11400 _____
Approved _____
Date _____

SPK & DPK

Models

- DPK (Double Pantry Faucet)
- SPK (Single Pantry Faucet)



- DPK (Shown above)



- SPK (Shown above)



- DPK29 with SGLT1 easyTouch

Standard Features

Single & Double pantry faucets body design with one & two handles (hot and cold water).

Includes mounting bracket for secure attachment to kettle console or stand, faucet bracket is welded as standard with stationary kettles.

Swing spout design for reach over the kettle rim and flexible operation.

Compatible with kettle & skillet models (see below model configuration guide).

OEM accessory for Cleveland Range.

Durable construction suitable for commercial kitchen use.

Typically mounted with ¾" water connections (check model for exact plumbing sizing).

Not installed at the factory

760 Beta Drive, Unit D
Mayfield Village, Ohio 44143

Tel:1-800-338-2204
Email: steam@clevelandrange.com

www.clevelandrange.com
10 / 2025

Timeless Quality, Trusted For Life ®

Cleveland

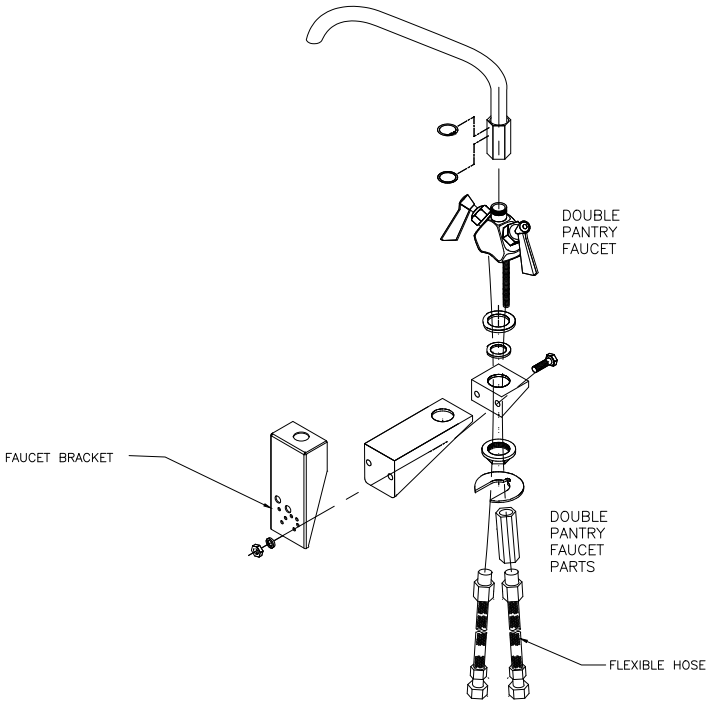

(DOUBLE PANTRY FAUCET MTG DETAIL)

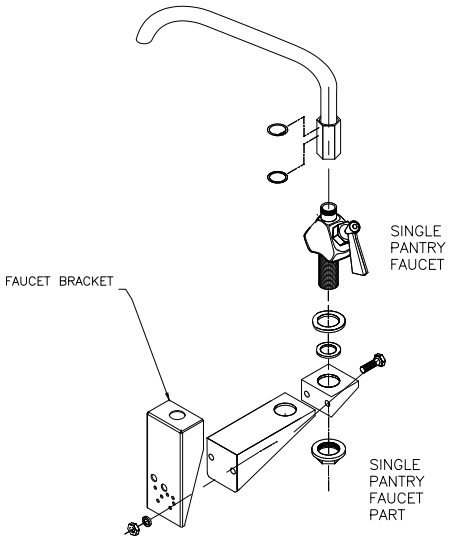

(SINGLE PANTRY FAUCET MTG DETAIL)

MODEL	NEW		Dimensions
	SPK	DPK	
SET-10	SPK24	DPK24	8" W x 6" H
KGL-25-T	SPK26	DPK26	14" W x 6.15625" H
KGL-40/60/80-T	SPK25	DPK25	18.5" W x 13.5" H
KGT-12-T	SPK28	DPK28	14" W x 12.5" H
KGT-12-TGB	SPK28	DPK28	14" W x 12.5" H
KGT-6-T	SPK28	DPK28	14" W x 12.5" H
KET-20-T	SPK28	DPK28	14" W x 12.5" H
KET-3/6/12-T	SPK27	DPK27	12.25" W x 10" H
KET-6/12/-TGB	SPK27	DPK27	12.25" W x 10" H
SEL-T1	SPK29	DPK29	14" W x 6.15625" H
SGL-T1	SPK29	DPK29	14" W x 6.15625" H
KDL-25/40-T	SPK32	DPK32	16" W x 6.8125" H
KDL-40/60/80-TSH KEL-40/60-TSH	SPK33	DPK33	14" W x 6.15625" H
KDL-60/80/100-T	SPK31	DPK31	14" W x 12.5" H
KEL-25-T	SPK30	DPK30	16" W x 6.8125" H
KEL-40/60/80/100-T	SPK28	DPK28	14" W x 12.5" H
KET-20-TGB	SPK28	DPK28	14" W x 12.5" H
TKET-3-T	SPK27	DPK27	12.25" W x 10" H
TKET-6/12-T	SPK27	DPK27	12.25" W x 10" H

(NOT TO SCALE)

SPK & DPK

760 Beta Drive, Unit D
Mayfield Village, Ohio 44143
Tel:1-800-338-2204
Email: steam@clevelandrange.com
www.clevelandrange.com
10/2025

Timeless Quality, Trusted For Life ®

CLEVELAND
A Welbilt Brand

Packing List

INSTALLATION KIT

WATER FAUCET INSTALL KIT

ID# 25872

WELBILT P/N: **INSTWATER**

Item	ID #		Qty per kit
1	24303	3/4" NSF FEMALE X FEMALE GARDEN HOSES 6' LONG	2
			
2	24948	3/4 MGH x 1/2 NPT Brass Male	2
		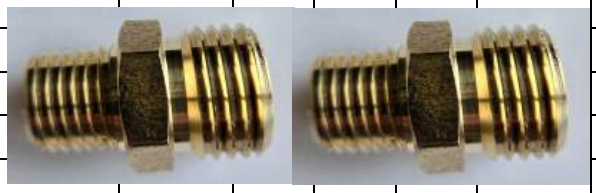	

T&S BRASS AND BRONZE WORKS, INC.

2 Saddleback Cove / P.O. Box 1088
Travelers Rest, SC 29690

Travelers Rest, SC: 800-476-4103 • Simi Valley, CA: 800-423-0150 • Fax: 864-834-3518 • www.tsbrass.com

Model No.

HG-4-SK Series

Item No.

This Space for Architect/Engineer Approval

Job Name_____Date_____

Model Specified_____ Quantity_____

Customer/Wholesaler_____

Contractor_____

Architect/Engineer_____

SAFE·T·LINK

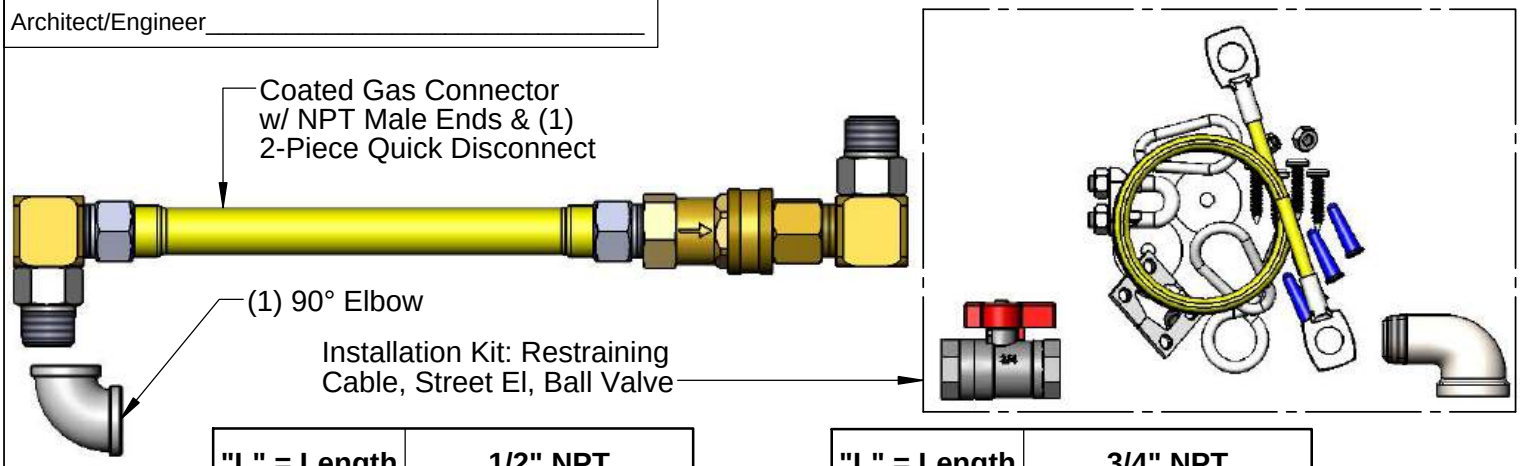

"L" = Length	1/2" NPT
12"	HG-4C-12SK
24"	HG-4C-24SK
36"	HG-4C-36SK
48"	HG-4C-48SK
60"	HG-4C-60SK
72"	HG-4C-72SK

"L" = Length	3/4" NPT
12"	HG-4D-12SK
24"	HG-4D-24SK
36"	HG-4D-36SK
48"	HG-4D-48SK
60"	HG-4D-60SK
72"	HG-4D-72SK

"L" = Length	1" NPT
12"	HG-4E-12SK
24"	HG-4E-24SK
36"	HG-4E-36SK
48"	HG-4E-48SK
60"	HG-4E-60SK
72"	HG-4E-72SK

"L" = Length	1 1/4" NPT
12"	HG-4F-12SK
24"	HG-4F-24SK
36"	HG-4F-36SK
48"	HG-4F-48SK
60"	HG-4F-60SK
72"	HG-4F-72SK

HG-4-SK Series Product Configurator: **HG - 4 ☐ - ☐ SK**

Ex: HG - 4 D - 36 SK
Gas Hose, 3/4" NPT Male Ends, 36" Length, (1) 2-Piece Quick Disconnect,
(1) 90° Elbow, (2) Swivel Links, (1) Installation Kit

Product Specifications:

Safe-T-Link Gas Appliance Connector: Coated Hose w/ NPT Male Ends, Swivel Links, 2-Piece Quick Disconnect, 90° Elbow & Installation Kit

Product Compliance:

ANSI Z21.69 / CSA 6.16
NSF 2
NFPA 54

Drawn: KJG	Checked: JRM	Approved: JHB	Date: 10/09/15	Scale: NTS	Sheet: 1 of 1

CMA
RESTAURANT SUPPLY & DESIGN, INC.

Submittal Sheet

04/21/2026

ITEM# 90 - FLOOR TROUGH (1 EA REQ'D)

Pacific Stainless FT2424-SG

Floor Trough, 24"W x 24"D, removable stainless steel subway-style grating, 4" deep trough pan with built-in pitch toward drain, 3" I.P.S. x 3" drain tail piece (no hub connection), 14/304 stainless steel construction, NSF, Made in USA

The spec sheet for this item can be viewed on item 1)

ACCESSORIES

Mfr	Qty	Model	Spec
Pacific Stainless	1	FTBD	Optional Box Drain, Made in USA

CMA RESTAURANT SUPPLY & DESIGN, INC.

Submittal Sheet

04/21/2026

ITEM# 90 - TILTING SKILLET BRAISING PAN, GAS (1 EA REQ'D)

Cleveland SGL30TR

DuraPan™ Tilting Skillet, gas, 30-gallon capacity, modular open base, standard with hydraulic hand tilt with quick lowering feature, stainless steel construction, includes spring-assisted cover, gallon markings and electronic spark ignition, stainless steel level adjustable feet, 91,000 BTU, IPX6, CE, NSF

ACCESSORIES

Mfr	Qty	Model	Spec
Cleveland	1		1-year parts & labor warranty, standard
Cleveland	1	PERFORMANCE START-UP	Performance start-up included at customer request after equipment is installed (free water quality check included) (mileage capped at 100 miles round trip) (contact Cleveland sales representative for details)
Cleveland	1		New construction
Cleveland	1		Natural Gas
Cleveland	1		Standard wattage
Cleveland	1		120v/60/1-ph, 1.8 amps NEMA 5-15P, standard
Cleveland	1	HTS	Standard Manual Hand Tilt, with quick lowering feature (hydraulic)
Cleveland	1	TD2SK	2" tangent draw-off valve, front mounted left side (Note: May require additional lead time, contact factory)
Cleveland	1	DPK14	Double Pantry Faucet And Bracket For SEL30TR, SEL40TR, SGL30TR, SGL40TR, SGM30TR, SGM40TR, SEM30TR, SEM40TR
Cleveland	1	INSTWATER	2 x ¾” Female 6 ft Garden Hoses, 2 x ½” Male NPT to ¾” Male Garden Hose NPT Fittings
T&S Brass	1	HG-4D-48SK	Safe-T-Link Gas Connector Kit, 3/4" connection, 48" hose, stainless steel braiding with extruded coating, (1) Quick-Disconnect, (2) Swivelink fittings, (1) 90° elbow, ball valve, restraining cable adjustable for 3' to 5', 180,000 BTU / hr minium flow capacity

Cleveland

DURAPAN™ SERIES

GAS, OPEN OR MODULAR BASE,
30 & 40 GALLON (115 & 150 LITER)

Project _____
Item _____
Quantity _____
FCSI Section 11400 _____
Approved _____
Date _____

Models

- SGL-30-TR
- SGL-40-TR



Open base model
with optional Drain Drawer shown

Short Form Specifications

Shall be CLEVELAND, Tilting Skillet; Model SGL- _____ - TR gas (TYPE _____) - holding no less than _____ gallons (_____ liters); complete with Thermostatic Safety and Gas Controls; Gallon Markings; Stainless Steel Clad 5/8" Cooking Surface; Hand Tilt; Spring Assist Cover with adjustable Vent. All Stainless Steel Construction.

Standard Features

- Leg Base
- Full 30/40 Gallon (115/150 Liters) Capacity Rating to Bottom of Pouring Lip
- Hydraulic Hand Tilt with quick lowering feature (HTS)
- Stainless Steel Clad 5/8" Cooking Surface Guaranteed against warping
- Stainless Steel Coved Cornered Pans with both Gallon and Liter Markings
- All Stainless Steel Construction for durability and easy cleaning
- Adjustable, Electronic Thermostat controls temperature from 100°F to 425°F
- High Efficiency Heating System with even heat distribution
- Electronic Spark Ignition (ESS)
- Fast Heat-Up and Recovery Time-Preheats in 11 minutes, full capacity from cold to boiling in 60 minutes
- Spring Assist Cover with Adjustable Vent and Full Width Handle
- On/Off Switch, Thermostat Knob and Pilots, recessed to avoid breakage
- Four Stainless Steel, Level adjustable feet, rear flanged for bolting
- All Controls are serviceable from the front of the unit
- Two pilot lights; Green = Power on, Amber = Temperature Cycling
- Meets IPX6 Water Rating Requirements
- High Limit Safety Device set at 475°F (246°C)
- Anti-Splash Pouring Lip
- Supplied with Cord & Plug for 115-volt controls
- Typical approvals include AGA, CSA, CE and NSF

Options & Accessories

- Sliding Drain Drawer with Splash Screen (SLD) (for SGL models only
- Power Tilt with Hand Tilt Override (PT1)
- Double or Single Pantry Faucet (SPS14, DPS14), includes Faucet Mounting Bracket
- Double or Single Pantry Skillet Filler with 60" hose (SKF-S or DKF-S)
- Hot & Cold Water Pre-Rinse Spray Head with Hose (PRS-S)
- Gas types other than natural
- Voltage Option:
- VOSK4, 220/240 Volt, 50 Hz, 1 Phase - for export
- Food Strainers for pouring spout (FS)
- Vegetable Steamers (VS)
- Poaching Pans (PP)
- Pan Carriers (PCS), not available on 30 gallon models with a Tangent Draw-Off Valve
- 2" Tangent Draw-Off Valve (TD2), left side only

KE004046-93 rev C

760 Beta Drive, Unit D
Mayfield Village, Ohio 44143

Tel 1.216.481.4900
Fax 1.216.481.3782
Email steam@clevelandrange.com

www.clevelandrange.com

Timeless Quality, Trusted For Life ®

Cleveland

DIMENSIONS

MODEL	A	B	C	D	E	G
SGL-30-TR	36"	32"	9"	5"	20"	32 7/8""
	(915mm)	(812mm)	(229mm)	(127mm)	(508mm)	(835mm)
SGL-40-TR	48"	44"	12 1/8"	8"	22"	44 7/8"
	(1220mm)	(1118mm)	(308mm)	(203mm)	(559mm)	(1140mm)

CAPACITIES

In 4 oz. servings. Other sizes may be calculated.
30 gallons / 115 Liters 960
40 gallons / 150 Liters 1280

SPECIFICATIONS

ELECTRICAL SUPPLY (6' CORD & PLUG)			GAS SUPPLY (PIPING 3/4" NPT)	CLEARANCE
VOLTS:	120	220/240	TYPE: NAT or LP	MIN. TO COMBUSTABLE SURFACES: SIDES: 0, REAR: 6" (153mm)
PHASE:	1	1	WATER COLUMN: 4.5 (NAT), 10.5 (LP)	MIN. TO NON COMBUSTABLE SURFACES: SIDES & REAR: 0
AMPS:	1.8	.83	BTU PER CU. FT.: 1000 (NAT), 2500 (LP)	NOTE: 4 1/2" (115mm) required on right hand side for faucet
FREQ:	60 HZ	50 HZ	SUPPLY PRESSURE: 5" W.C. MIN (NAT), 11" W.C. MIN (LP)	
			BTU RATINGS: *SGL-30-TR:* 91,000 per hour *SGL-40-TR:* 130,000 per hour	

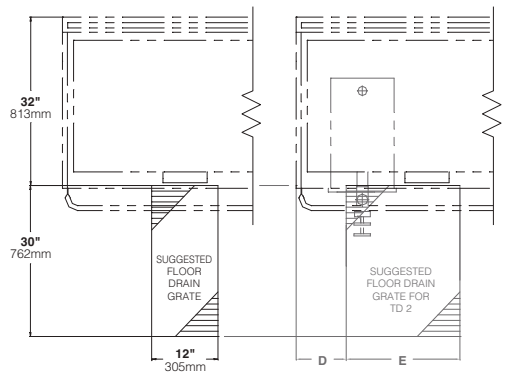

Shipping Weights & Dimensions

Model -
SGL30TR Weight - 504 lbs
Width - 44"
Depth - 44"
Height - 54"
SGL40TR Weight - 624 lbs
Width - 48"
Depth - 58"
Height - 54"



EXTERIOR HINGES (REQUIRED FOR OPTIONAL TD 2)

WATER

Ⓒ COLD WATER	Ⓗ HOT WATER
PIPING - 1/2" NPT (DOUBLE)	
3/8" COPPER TUBE (SINGLE)	

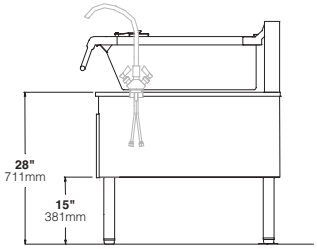

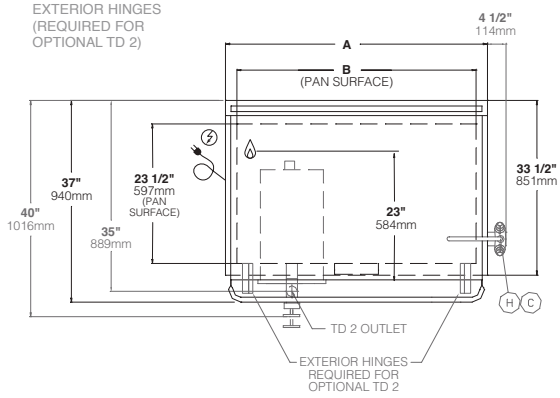

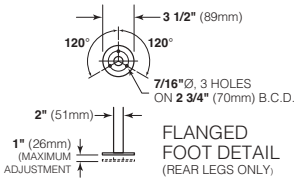

FLANGED FOOT DETAIL (REAR LEGS ONLY)

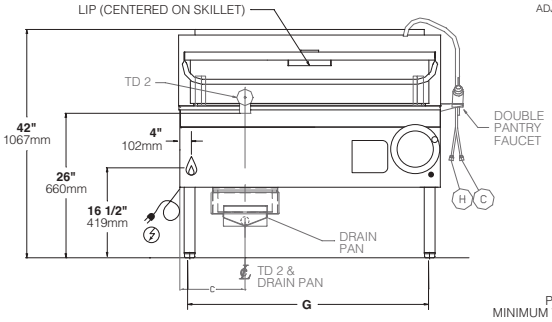

NOTE: NON STANDARD ITEMS ARE SHOWN IN GRAY

NOTES:
Cleveland Range reserves right of design improvement or modification, as warranted.
Many regional, state and local codes exist and it is the responsibility of the owner and installer to comply with the codes.
Cleveland Range equipment is built to comply with applicable standards for manufacturers. Included among those approval agencies are U.L., NSF, CGA, CSA, ETL and others.

(NOT TO SCALE)

Braising Pans / Tilting Skillets

760 Beta Drive, Unit D
Mayfield Village, Ohio 44143
Tel 1.216.481.4900
Fax 1.216.481.3782
Email steam@clevelandrange.com
www.clevelandrange.com

Timeless Quality, Trusted For Life ®

CMA RESTAURANT SUPPLY & DESIGN, INC.

Submittal Sheet

04/21/2026

ITEM# 91 - FLOOR TROUGH (1 EA REQ'D)

Pacific Stainless CUSTOM

Floor Trough, 24"W x 30"D, removable stainless steel subway-style grating, 4" deep trough pan with built-in pitch toward drain, 3" I.P.S. x 3" drain tail piece (no hub connection), 14/304 stainless steel construction, NSF, Made in USA

The spec sheet for this item can be viewed on item 1)

ACCESSORIES

Mfr	Qty	Model	Spec
Pacific Stainless	1	FTBD	Optional Box Drain, Made in USA

CMA RESTAURANT SUPPLY & DESIGN, INC.

Submittal Sheet

04/21/2026

ITEM# 92 - RANGE, 36", 6 OPEN BURNERS (1 EA REQ'D)

Garland Commercial Ranges G36-6R

G Starfire Pro Series Restaurant Range, gas, 36", (6) 33,000 BTU open burners, cast iron top & ring grates, standard oven, includes (1) rack & 3 position rack guides, stainless steel front, sides, plate rail, 2-piece back guard and shelf, 6" stainless steel legs with adjustable feet, 236,000 BTU, CSA Flame, CSA Star, cCSAus, NSF (Garland)

ACCESSORIES

Mfr	Qty	Model	Spec
Garland Commercial Ranges	1		One year limited parts and labor warranty, covers products purchased and installed in the USA only, standard
Garland Commercial Ranges	1		Gas type to be specified
T&S Brass	1	HG-4D-48SK	Safe-T-Link Gas Connector Kit, 3/4" connection, 48" hose, stainless steel braiding with extruded coating, (1) Quick-Disconnect, (2) Swivelink fittings, (1) 90° elbow, ball valve, restraining cable adjustable for 3' to 5', 180,000 BTU / hr minium flow capacity

GARLAND

G-Series 36" Gas Restaurant Range

Project _____
Item _____
Quantity _____
CSI Section 11400
Approved _____
Date _____

Models

- G36-6R
- G36-6S
- G36-6T
- G36-4G12R
- G36-4G12S
- G36-4G12T
- G36-2G24R
- G36-2G24S
- G36-2G24T
- G36-G36R
- G36-G36S
- G36-G36T



Model G36-6R

Standard Features

- Large 27" (686mm) work top surface
- Stainless steel front and sides
- Stainless steel 5" (127mm) plate rail
- Stainless steel backguard, w/ removable stainless steel shelf
- 12" (305mm) section stamped drip trays w/ dimpled bottom
- 6" (152mm) adj. stainless steel legs
- Large, heavy-duty die-cast knobs
- Gas regulator
- Easy to access oven pilots lights
- Reinforced chassis

Standard on Applicable Models:

- Open storage in lieu of oven, (suffix S)
- Modular top (Suffix T) with stainless steel low-profile backguard & 4" (102mm) adj. metal legs
- Ergonomic split cast-iron top ring grates
- 33,000 BTU/9.67 kW 2-piece cast-iron Starfire Pro® open top burner
- 5/8" (15mm) thick steel griddle plate w/ manual hi/lo valve control, 23" (584mm) working depth surface, standard on right, optional on left
- 4-1/4" (108mm) wide grease trough
- 18,000 BTU/5.27 kW cast-iron "H" style griddle burner per 12" (305mm) width of griddle
- 38,000 BTU/ 11.13 kW cast-iron "H" style oven burner
- Snap-action modulating oven thermostat low to 500° F
- Nickel-plated oven rack and 3-position removable oven rack guide
- Large porcelain oven interior, fits standard sheet pans in both directions for standard ovens
- Square door design with strong, "keep-cool" oven door handle

Options & Accessories

- Snap-action modulating griddle control 175° to 425° F
- Hot top 12" (305mm) plate in lieu of two open burners, manual valve controlled w/ 18,000 BTU/5.27 kW cast-iron "H" burner standard on left side, optional on right
- Low-profile 9-3/8" (238mm) backguard stainless steel front and sides
- Additional oven racks
- Four 6" (152mm) levelling swivel casters w/front locking
- Flanged deck mount legs
- Celsius temperature dials
- Piezo spark ignition for pilots on griddles
- Range mount salamanders and cheesemelters are available for the oven and storage base models only

Specifications

Gas restaurant series range with large capacity standard oven.

35 7/16" (900mm) wide, 27" (686mm) deep worktop surfaces.

Stainless steel front, sides and 5" wide front rail.

6" (152mm) legs with adjustable feet.

Six Starfire Pro® 2-piece, 33,000 BTU/9.67 kW (natural gas), cast-iron open burners set in split cast-iron ergonomic grates.

Griddle or optional hot top with cast-iron "H" style burners, 18,000 BTU/5.27 kW (natural gas), in lieu of open burners.

One-piece oven with porcelain interior and heavy-duty, "keep-cool" door handle.

Heavy cast-iron "H" oven burner rated 38,000 BTU/11.13 kW (natural gas)

Oven controlled by even bake, fast recovery sanp-action modulating oven thermostat.

Available with storage base or modular top model in lieu of oven.

NOTE: Use only Garland certified casters and approved restraining devices.

G-Series 36" Gas Restaurant Range

Garland Commercial Ranges Ltd.
1177 Kamato Road,
Mississauga, Ontario
L4W 1X4 CANADA

General Inquires 1-905-624-0260
USA Sales, Parts and Service 1-800-424-2411
Canadian Sales 1-888-442-7526
Canada or USA Parts/Service 1-800-427-6668

www.garland-group.com
8069
09/24

WELBILT an Ali Group Company

GARLAND

G-Series 36" Gas Restaurant Range

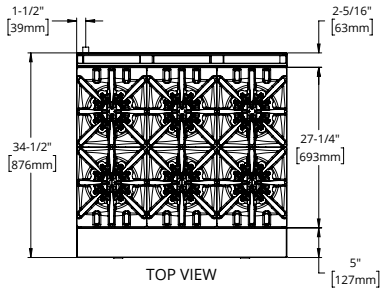

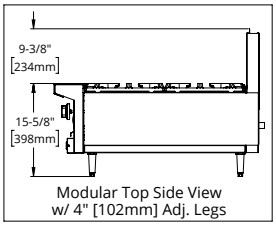

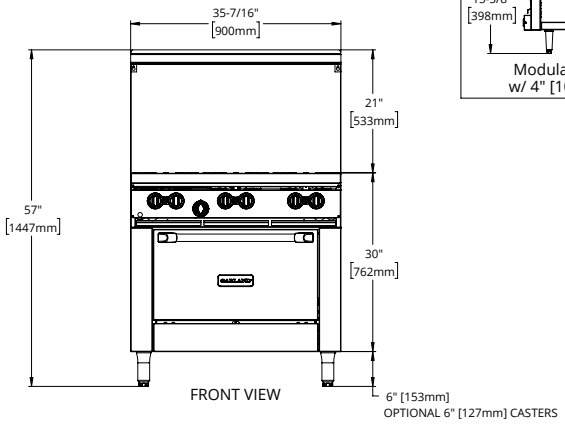

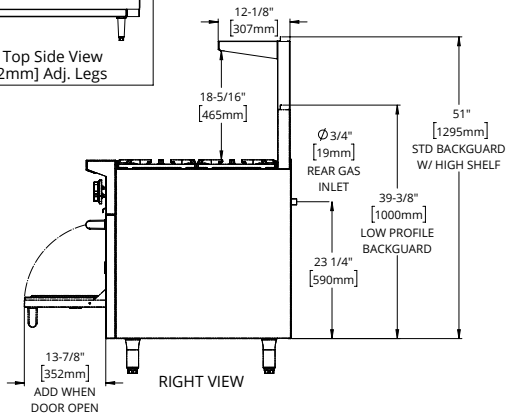

Gas input ratings shown for installations up to 2000 ft., (610m) above sea level. Please specify altitudes over 2000 ft.

This product is not approved for residential use.

Note: Installation clearance reductions are applicable only where local codes permit.

Model Number	Description	Total BTU/Hr Natural	Shipping Information	
			Lbs/Kg	Cu Ft
G36-6R	Six OB w/26" Oven	236,000	430/195	40
G36-6S	Six OBs w/SB	198,000	310/141	40
G36-6T	Six OB MT	198,000	190/86	22
G36-4G12R	12" G, Four OB w/26" Oven	188,000	460/209	40
G36-4G12S	12" G Four OB w/SB	150,000	340/154	40
G36-4G12T	12" G Four OB MT	150,000	220/100	22
G36-2G24R	24" G, Two OB w/26" Oven	140,000	495/225	40
G36-2G24S	24" G Two OB w/SB	102,000	375/170	40
G36-2G24T	24" G Two OB MT	102,000	255/116	22
G36-G36R	36" G w/26" Oven	92,000	530/240	40
G36-G36S	36" G w/SB	54,000	410/186	40
G36-G36T	36" G MT	54,000	290/132	22

Burner Ratings (BTU/Hr/kW)		
Burner	Natural	Propane
Open	33,000/9.67	30,000/8.79
Griddle/Hot Top	18,000/5.27	18,000/5.27
Oven	38,000/11.13	32,000/9.38

Manifold Operating Pressure	
Natural	Propane
4.5" WC 11 mbar	10.0" WC 25 mbar

OB = Open Burner, SS = Space Saver
SB = Storage Base, MT = Modular Top, G = Griddle

Model Type	Width	Depth	Height w/shelf	Oven Interior		
				Height	Depth	Width
Range Base	35-1/2" (900mm)	34-1/2" (876mm)	57" (1448mm)	13" (330mm)	26" (660mm)	26-1/4" (667mm)
Modular Top	35-1/2" (900mm)	34-1/2" (876mm)	25" (654mm)*	N/A	N/A	N/A

*w/ low-profile backguard

Model Type	Combustible Wall Clearance		Entry Clearances	
	Sides	Rear	Crated	Uncrated
Range Base	14" (356mm)	6" (152mm)	37" (940mm)	36-1/2" (927mm)
Modular Top	14" (356mm)	6" (152mm)	16" (406mm)	12" (305mm)

Garland reserves the right to make changes to the design or specifications without prior notice.

Garland Commercial Ranges Ltd.
1177 Kamato Road,
Mississauga, Ontario
L4W 1X4 CANADA

General Inquires 1-905-624-0260
USA Sales, Parts and Service 1-800-424-2411
Canadian Sales 1-888-442-7526
Canada or USA Parts/Service 1-800-427-6668

www.garland-group.com
8069
09/24

WELBILT
an Ali Group Company

CMA
RESTAURANT SUPPLY & DESIGN, INC.

Submittal Sheet

04/21/2026

ITEM# 93 - CHARBROILER, GAS, COUNTERTOP (1 EA REQ'D)

Garland Commercial Ranges GD-36RB

Designer Series Charbroiler, countertop, gas, 36" W, cast iron radiants, piezo spark ignition, stainless steel front and sides, internal grease drawer with magnetic door, 4" adjustable legs, 90,000 BTU (Garland), CSA, NSF

ACCESSORIES

Mfr	Qty	Model	Spec
Garland Commercial Ranges	1		One year limited parts and labor warranty, covers products purchased and installed in the USA only, standard
Garland Commercial Ranges	1		Natural gas, specify elevation if over 2,000 ft
Garland Commercial Ranges	1	SS-CSD-36	Designer Series Equipment Stand, 36" W x 25" H, open base with undershelf, stainless steel finish, for GD-36RB, GD-36G, GD-36GTH (Garland)
Garland Commercial Ranges	1		Swivel casters with front brakes (set of 4)
T&S Brass	1	HG-4D-48SK	Safe-T-Link Gas Connector Kit, 3/4" connection, 48" hose, stainless steel braiding with extruded coating, (1) Quick-Disconnect, (2) Swivelink fittings, (1) 90° elbow, ball valve, restraining cable adjustable for 3' to 5', 180,000 BTU / hr minium flow capacity

GARLAND

Designer Series Gas Broilers

Project _____
Item _____
Quantity _____
CSI Section 11400
Approved _____
Date _____

Models

- GD-18RB
- GD-18RBFF
- GD-24RB
- GD-24RBFF
- GD-30RB
- GD-30RBFF
- GD-36RB
- GD-36RBFF



Model GD-24RB

Standard Features

- Stainless steel front and sides
- 4" (102mm) stainless steel legs
- 17-1/4" (436mm) deep cooking surface
- Cast-iron radiants
- Piezo spark ignition
- Hi/Lo control valve
- Rear gas connection w/pressure regulator
- Natural or propane gas
- 45,000, 60,000, 75,000 or 90,000 BTU total input
- Flame-Failure protection (suffix "FF")
- One-year limited parts & labor warranty (USA & Canada only)

Options & Accessories

- Stainless steel back and bottom
- Removable stainless steel 3-piece broiler splatter guard specify width. (Shield will add 10" height around top section of broiler)
- Stands are available

Specifications

Gas designer series broilers in four widths; models GD-18RB 18" (460mm) wide GD-24RB 24"(610mm) wide GD-30RB 30" (760mm wide) and GD-36RB 36" (914mm) wide.

Designed as free standing or to be banked with other GD series equipment. 24" (610mm) deep x 15" (381mm) high, easy-clean design with stainless steel front and sides, cast-iron radiants, and optional broiler splatter shield.

H/Lo valve controlled.

Piezo spark ignition.

Natural or propane gas, 45,000, 60,000, 75,000 and 90,000 BTU.

- Flame-Failure protection (suffix "FF")

Designer Series Gas Broilers

Garland Commercial Ranges Ltd.
1177 Kamato Road,
Mississauga, Ontario
L4W 1X4 CANADA

General Inquires 1-905-624-0260
USA Sales, Parts and Service 1-800-424-2411
Canadian Sales 1-888-442-7526
Canada or USA Parts/Service 1-800-427-6668

www.garland-group.com
6871A
05/25

WELBILT an Ali Group Company

GARLAND

Designer Series Gas Broilers

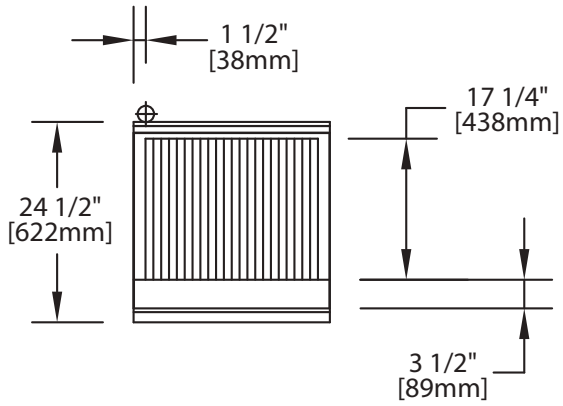

Gas Input ratings shown here are for installations up to 2,000 ft. (610m) above sea level. Specify altitudes over 2,000 ft.
Garland products are not approved or authorized for home or residential use, but are intended for commercial applications only. Garland will not provide service, warranty, maintenance or support of any kind other than in commercial applications.

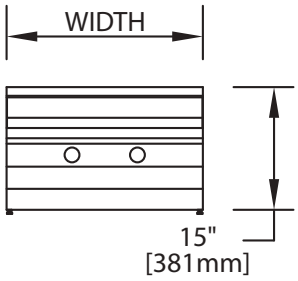

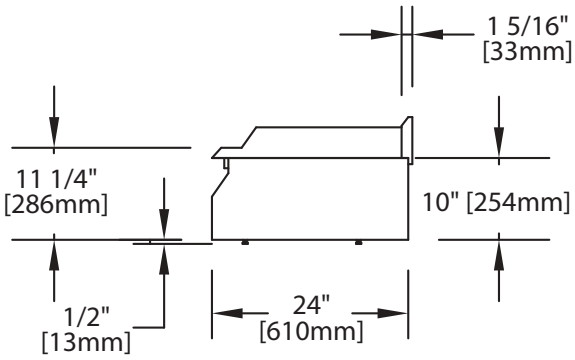

Model	Over All Dimensions			Total Input BTU/Kw	CU. Ft.	Ship Wt Lb/kg
	Width	Height	Depth			
GD-18RB(FF)	18" (460mm)	15" (381mm)	24" (610mm)	45,000/13.19	8	110/50
GD-24RB(FF)	24" (610mm)	15" (381mm)	24" (610mm)	60,000/17.58	8	150/88
GD-30RB(FF)	30" (760mm)	15" (381mm)	24" (610mm)	75,000/21.98	9	200/91
GD-36RB(FF)	36" (914mm)	15" (381mm)	24" (610mm)	90,000/26.37	11	240/109

Non Combustible Installation only		Floor or Base
Sides	Back	
0"	0"	Non Combustible

Manifold Inlet Size NPT	Manifold Operating Pressure			
	Natural		Propane	
	"WC	mbar	"WC	mbar
3/4"	4.0	10	10	24.9

Garland reserves the right to make changes to the design or specifications without prior notice.

Garland Commercial Ranges Ltd.
1177 Kamato Road,
Mississauga, Ontario
L4W 1X4 CANADA

General Inquires 1-905-624-0260
USA Sales, Parts and Service 1-800-424-2411
Canadian Sales 1-888-442-7526
Canada or USA Parts/Service 1-800-427-6668

www.garland-group.com
6871A
05/25

WELBILT an Ali Group Company

GARLAND

E24 & Designer Series Equipment Stands

Project _____
Item _____
Quantity _____
CSI Section 11400
Approved _____
Date _____

Models

CS24 Stands for E24 Series

- SS-CS24-18
- SS-CS24-24
- SS-CS24-36
- SS-CS24-48
- SS-CS24-60
- SS-CS24-72

CSD Stands for Designer Series

- SS-CSD-GF
- SS-CSD-15
- SS-CSD-18
- SS-CSD-24
- SS-CSD-30
- SS-CSD-36
- SS-CSD-42



Stainless Steel SS-CSD-24 Counter Equipment stand shown with optional casters

Standard Features

- Stainless steel construction
- Seamless welded square tube legs
- 36-1/4" (921 mm) working height
- Accommodates 15"-72" (381-829 mm) widths
- Intermediate shelf in units up to 48" (1219 mm)
- CS24 stands depth 29", CSD stands depth 24".
- All CS24 and CSD stands are designed specifically to fit Garland indented models.
- One-year limited parts & labor warranty (USA & Canada only)

Options & Accessories

- Swivel casters set of 4 w/front brakes

Specifications

Garland countertop equipment heavy-duty stand for use with E24 or ED, GD designer series units.

One unit per stand.

Stainless steel construction and seamless welded square tube legs.

One intermediate shelf.

Working height of 36-1/4" (921 mm).

NSF

E24 & Designer Series Equipment Stands

Garland Commercial Ranges Ltd.
1177 Kamato Road,
Mississauga, Ontario
L4W 1X4 CANADA

General Inquires 1-905-624-0260
USA Sales, Parts and Service 1-800-424-2411
Canadian Sales 1-888-442-7526
Canada or USA Parts/Service 1-800-427-6668

www.garland-group.com
6832A
05/25

WELBILT an Ali Group Company

GARLAND

E24 & Designer Series Equipment Stands

Equipment Stands For E24 Series				
Model Number	Part Number	Description	H x W x D In (mm)	Ship Weight Lb / Kg
SS-CS24-18	A4502079	18" Stand for E24-31F/31SF only	24-7/8" (632mm) x 18" (457mm) x 29" (737mm)	38/17
SS-CS24-24	A4502083	24" Stand	24-7/8" (632mm) x 24" (610mm) x 29" (737mm)	42/19
SS-CS24-36	A4502087	36" Stand	24-7/8" (632mm) x 36" (914mm) x 29" (737mm)	48/22
SS-CS24-48	A4502091	48" Stand	24-7/8" (632mm) x 48" (1219mm) x 29" (737mm)	54/25
SS-CS24-60	A4502095	60" Stand (no intermediate shelf included)	24-7/8" (632mm) x 60" (1524mm) x 29" (737mm)	60/27
SS-CS24-72	A4502099	72" Stand (no intermediate shelf included)	24-7/8" (632mm)x 72" (1829mm) x 29" (737mm)	66/30

Equipment Stands For ED & GD Designer Series				
Model Number	Part Number	Description	H x W x D In (mm)	Ship Weight Lb / Kg
SS-CSD-GF	A4502147	15" Stand for GD-15F only	24-7/8" (632mm) x 15" (381mm) x 24" (610mm)	36/16
SS-CSD-15	A4502123	15" Stand	24-7/8" (632mm) x 15" (381mm) x 24" (610mm)	36/16
SS-CSD-18	A4502127	18" Stand	24-7/8" (632mm) x 18" (457mm) x 24" (610mm)	38/17
SS-CSD-24	A4502131	24" Stand	24-7/8" (632mm) x 24" (610mm) x 24" (610mm)	42/19
SS-CSD-30	A4502135	30" Stand	24-7/8" (632mm) x 30" (762mm) x 24" (610mm)	44/20
SS-CSD-36	A4502139	36" Stand	24-7/8" (632mm) x 36" (914mm) x 24" (610mm)	48/22
SS-CSD-42	A45022143	24" Stand	24-7/8" (632mm) x 42" (1067mm) x 24" (610mm)	54/25

Many local codes exist, and it is the responsibility of the owner and installer to comply with those codes.

Garland reserves the right to change or improve product specifications without notification.

Garland products are not approved or authorized for home or residential use, but are intended for commercial applications only. Garland will not provide service, warranty, maintenance or support of any kind other than in commecial applications.

Garland reserves the right to make changes to the design or specifications without prior notice.

Garland Commercial Ranges Ltd.
1177 Kamato Road,
Mississauga, Ontario
L4W 1X4 CANADA

General Inquires 1-905-624-0260
USA Sales, Parts and Service 1-800-424-2411
Canadian Sales 1-888-442-7526
Canada or USA Parts/Service 1-800-427-6668

www.garland-group.com
6832A
05/25

WELBILT an Ali Group Company

CMA
RESTAURANT SUPPLY & DESIGN, INC.

Submittal Sheet

04/21/2026

ITEM# 94 - FAUCET, KETTLE / POT FILLER (1 EA REQ'D)

T&S Brass B-0600

Pot Filler Faucet, wall mount, vacuum breaker, flexible stainless steel hose, 68"L, hooked nozzle with self-closing valve, 1/2" IPS female inlet

T&S BRASS AND BRONZE WORKS, INC.
2 Saddleback Cove / P.O. Box 1088
Travelers Rest, SC 29690

Travelers Rest, SC: 800-476-4103 • Simi Valley, CA: 800-423-0150 • Fax: 864-834-3518 • www.tsbrass.com

Model No.
B-0600

Item No.

This Space for Architect/Engineer Approval

Job Name_____Date_____

Model Specified_____ Quantity_____

Customer/Wholesaler_____

Contractor_____

Architect/Engineer_____

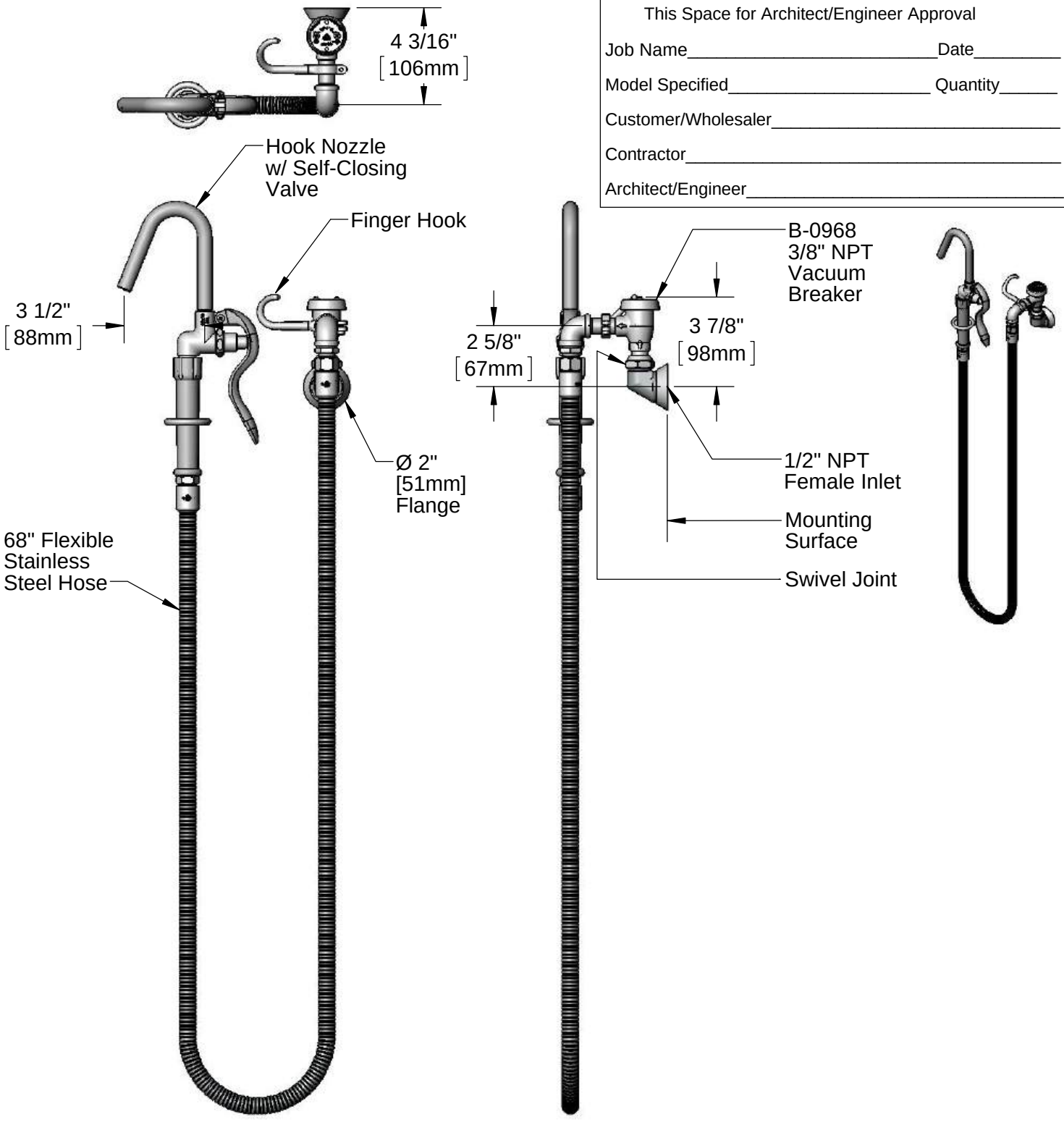

Product Specifications:

Wall Mount Swivel Pot Filler w/ 68" Flexible Stainless Steel Hose, Hook Nozzle, 3/8" Vacuum Breaker & 1/2" NPT Female Inlet

Product Compliance:

ASME A112.18.1 / CSA B125.1
NSF 61 - Section 9
NSF 372 (Low Lead Content)
ASSE 1001 (VB)

Drawn:	Checked:	Approved:	Date:	Scale:	Sheet:
JBC	JRM	JHB	04/12/16	1:6	1 of 2

T&S BRASS AND BRONZE WORKS, INC.
2 Saddleback Cove / P.O. Box 1088
Travelers Rest, SC 29690

Travelers Rest, SC: 800-476-4103 • Simi Valley, CA: 800-423-0150 • Fax: 864-834-3518 • www.tsbrass.com

Model No. **B-0600**

Item No.

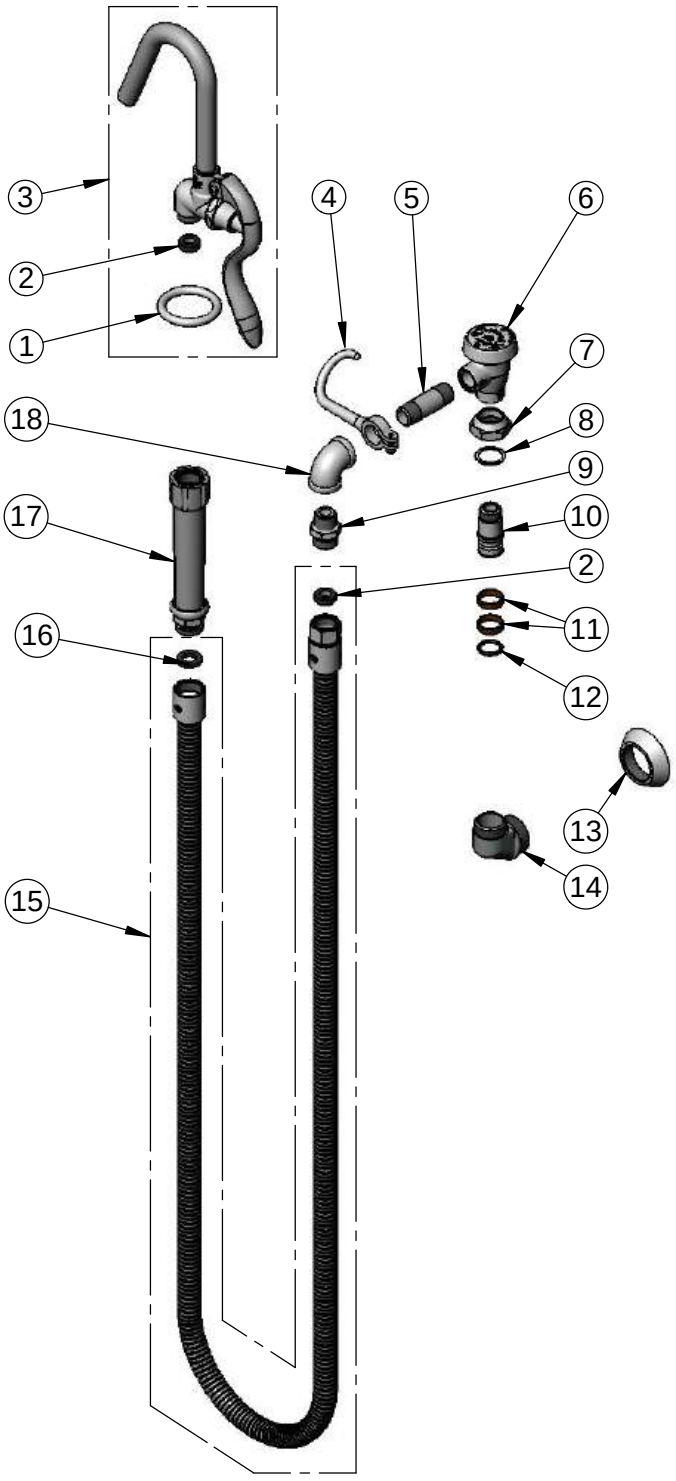

ITEM NO.	SALES NO.	DESCRIPTION
1	000907-45	Spray Valve Hold Down Ring
2	010476-45	#27 Washer
3	002851-40	Hook Nozzle & Spray Valve
4	004R	Finger Hook
5	000357-40	Nipple, 3/8" NPT x 2"
6	B-0968	3/8" NPT Vacuum Breaker
7	000711-40	Swivel Nut
8	009E	Plastic Washer
9	053A	Adapter, 3/8" NPT Male
10	000843-25	Swivel Body
11	011429-45	Swivel Sleeves (2)
12	001074-45	O-Ring
13	000101-40	Flange
14	000181-40	B-0580 Body
15	B-0068-H2A	68" Flexible Stainless Steel Hose, Less Handle
16	001014-45	Washer, B-0100 Hose Barrel
17	002987-40	Gray Grip Handle
18	001355-40	Elbow, 3/8 NPT
45		

Product Specifications:

Wall Mount Swivel Pot Filler w/ 68" Flexible Stainless Steel Hose, Hook Nozzle, 3/8" Vacuum Breaker & 1/2" NPT Female Inlet

Product Compliance:

ASME A112.18.1 / CSA B125.1
NSF 61 - Section 9
NSF 372 (Low Lead Content)
ASSE 1001 (VB)

Drawn:	Checked:	Approved:	Date:	Scale:	Sheet:
JBC	JRM	JHB	04/12/16	NTS	2 of 2

CMA
RESTAURANT SUPPLY & DESIGN, INC.

Submittal Sheet

04/21/2026

ITEM# 95 - SPARE NO.

<Spare No.>

Description: Spare No.

Notes:

CMA
RESTAURANT SUPPLY & DESIGN, INC.

Submittal Sheet

04/21/2026

ITEM# 96 - SHELVING UNIT, WITH METAL POST (1 EA REQ'D)

Metro PR-243674K3-S-4

Super Erecta Pro® Starter Unit, 24"W x 36"D x 74"H, (4) corrosion resistant shelves with removable polymer shelf mats, (4) bags of split sleeves, (4) posts, NSF

The spec sheet for this item can be viewed on item 5)

ACCESSORIES

Mfr	Qty	Model	Spec
Component Hardware	4	CMT2-5PBB	Caster, threaded stem, swivel, medium duty, 5" diameter, with ball bearing, side brake, 250 lb. load capacity, blue polyurethane wheel

CMA
RESTAURANT SUPPLY & DESIGN, INC.

Submittal Sheet

04/21/2026

ITEM# 97 - WORK TABLE, STAINLESS STEEL TOP (1 EA REQ'D)

Pacific Stainless WKT7236IS

Work Table, 72"W x 36"D, Flat Top Island Series, 16/304 stainless top with 2" turned down on 4-sides, 14 gauge galvanized "HAT" channels, stainless undershelf welded to (4) each 1-5/8" stainless tube legs with stainless adjustable feet, fully assembled, NSF, Made in USA

ACCESSORIES

Mfr	Qty	Model	Spec
Pacific Stainless	1	CHGC23-1451	5" Caster Swivel Stem, Brake, Made in USA

Stainless Steel Work Tables - Island Series - 4 Legs
Part # - WKT####IS

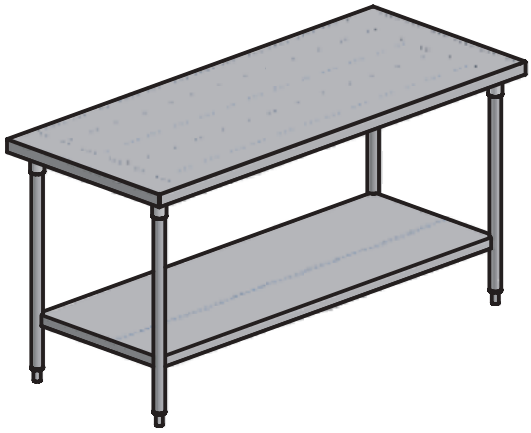

NSF

Item#: _____ Qty: ____

Model#: _____

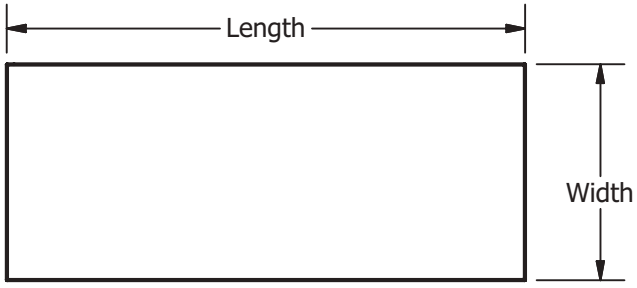

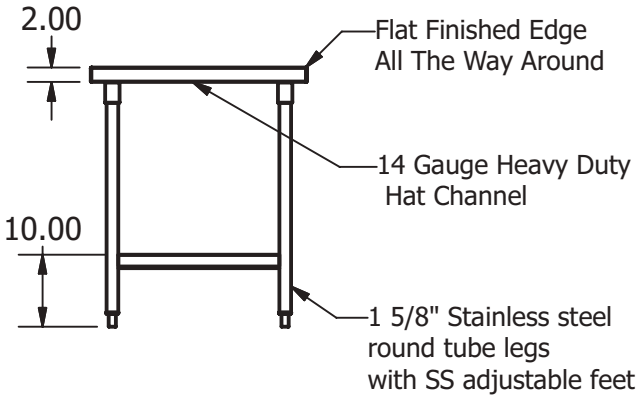

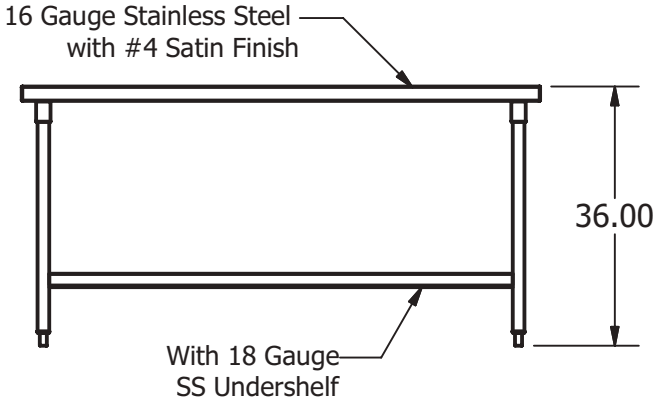

Features:

* Work table tops are constructed of 16 Gauge 304 Stainless Steel with #4 Satin Finish
* Tables supported with 14 gauge heavy duty Hat Channel
* With an 18 gauge stainless steel undershelf
* 1 5/8" Stainless steel round tube legs with SS adjustable feet
* Table working heights are 36"

Options:	Model Number	U/M
Adjustable Flange Feet	CHGA10-0854	each
Casters, (without brake)	CHGC23-1450	each
Casters, (with brake)	CHGC23-1451	each
15" x 20" Drawer Assembly w/ Plastic Pan	SDA152006P	each
15" x 20" Drawer Assembly w/ SS Pan	SDA152006S	each
20" x 20" Drawer Assembly w/ Plastic Pan	SDA202006P	each
20" x 20" Drawer Assembly w/ SS Pan	SDA202006S	each
Lower Table Height (State table work surface height)	LTH001	Lot

Stainless Steel Work Tables

Island Series - Table Lengths (15” to 138”)





Four Leg Island Tables with Undershelf

Length	24” Wide Model	30” Wide Model	33” Wide Model	36” Wide Model
15”	WKT 1524 IS	WKT 1530 IS	WKT1533 IS	WKT1536 IS
18”	WKT 1824 IS	WKT 1830 IS	WKT1833 IS	WKT1836 IS
21”	WKT 2124 IS	WKT 2130 IS	WKT2133 IS	WKT2136 IS
24”	WKT 2424 IS	WKT 2430 IS	WKT2433 IS	WKT2436 IS
27”	WKT 2724 IS	WKT 2730 IS	WKT2733 IS	WKT2736 IS
30”	WKT 3024 IS	WKT 3030 IS	WKT3033 IS	WKT3036 IS
33”	WKT 3324 IS	WKT 3330 IS	WKT3333 IS	WKT3336 IS
36”	WKT 3624 IS	WKT 3630 IS	WKT3633 IS	WKT3636 IS
42”	WKT 4224 IS	WKT 4230 IS	WKT4233 IS	WKT4236 IS
48”	WKT 4824 IS	WKT 4830 IS	WKT4833 IS	WKT4836 IS
54”	WKT 5424 IS	WKT 5430 IS	WKT5433 IS	WKT5436 IS
60”	WKT 6024 IS	WKT 6030 IS	WKT6033 IS	WKT6036 IS
66”	WKT 6624 IS	WKT 6630 IS	WKT6633 IS	WKT6636 IS
72”	WKT 7224 IS	WKT 7230 IS	WKT7233 IS	WKT7236 IS

Six Leg Island Tables with Undershelf

Length	24” Wide Model	30” Wide Model	33” Wide Model	36” Wide Model
72”	WKT 67224IS	WKT67230IS	WKT67233IS	WKT67236IS
78”	WKT 7824IS	WKT 7830IS	WKT 7833IS	WKT 7836IS
84”	WKT 8424IS	WKT 8430IS	WKT 8433IS	WKT 8436IS
90”	WKT 9024IS	WKT 9030IS	WKT 9033IS	WKT 9036IS
96”	WKT 9624IS	WKT 9630IS	WKT 9633IS	WKT 9636IS
102”	WKT 10224IS	WKT10230IS	WKT10233IS	WKT10236IS
108”	WKT 10824IS	WKT10830IS	WKT10833IS	WKT10836IS
114”	WKT 11424 IS	WKT11430 IS	WKT11433 IS	WKT 11436IS
120”	WKT 12024IS	WKT12030IS	WKT12033IS	WKT12036IS
126”	WKT 12624IS	WKT12630IS	WKT12633IS	WKT12636IS
132”	WKT 13224IS	WKT13230IS	WKT13233IS	WKT13236IS
138”	WKT 13824IS	WKT13830IS	WKT13833IS	WKT13836IS

“Custom Configurations Available”

Pacific Stainless PRODUCTS, INC.

Phone 888.618.2122 Fax 503.397.9596 E-mail info@pacificstainless.com

CMA
RESTAURANT SUPPLY & DESIGN, INC.

Submittal Sheet

04/21/2026

ITEM# 98 - MOBILE GARBAGE CAN (1 EA REQ'D)

OWNER

TO BE SUPPLIED AND INSTALLED BY THE OWNER.

Owner Supplied 1 Item #98

Description: MOBILE GARBAGE CAN

Notes: TO BE SUPPLIED AND INSTALLED BY THE OWNER.

CMA
RESTAURANT SUPPLY & DESIGN, INC.

Submittal Sheet

04/21/2026

ITEM# 99 - WORK TABLE, STAINLESS STEEL TOP (1 EA REQ'D)

Pacific Stainless WKT8436IS

Work Table, 84"W x 36"D, Flat Top Island Series, 16/304 stainless top with 2" turned down on 4-sides, 14 gauge galvanized "HAT" channels, stainless undershelf welded to (6) each 1-5/8" stainless tube legs with stainless adjustable feet, fully assembled, NSF, Made in USA

ACCESSORIES

Mfr	Qty	Model	Spec
Pacific Stainless	1	CHGC23-1451	5" Caster Swivel Stem, Brake, Made in USA

Stainless Steel Work Tables - Island Series - 6 Legs
Part # - WKT####IS

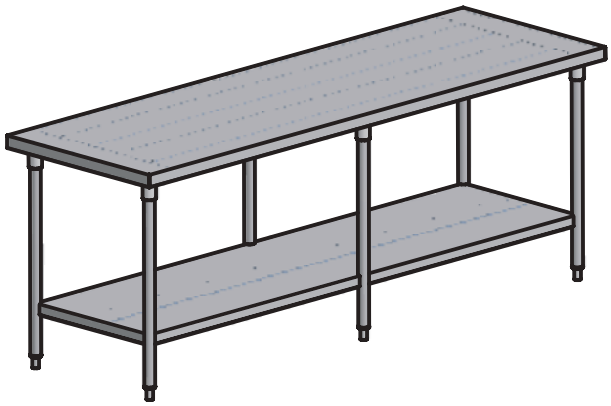

NSF

Item#: _____ Qty: ____

Model#: _____

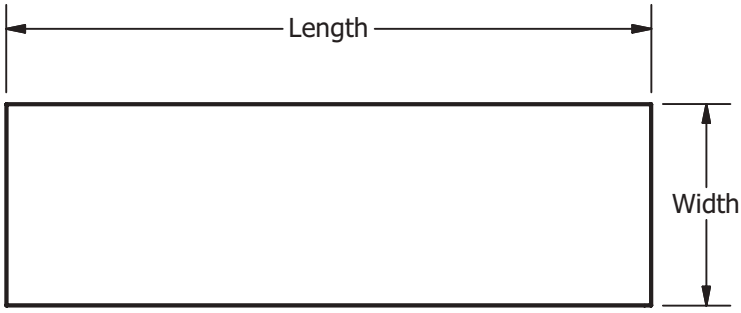

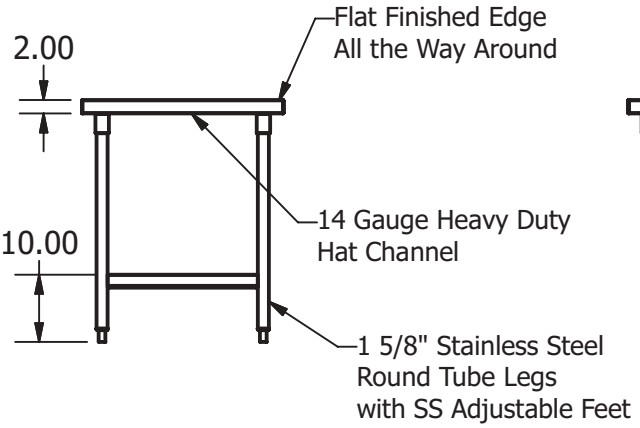

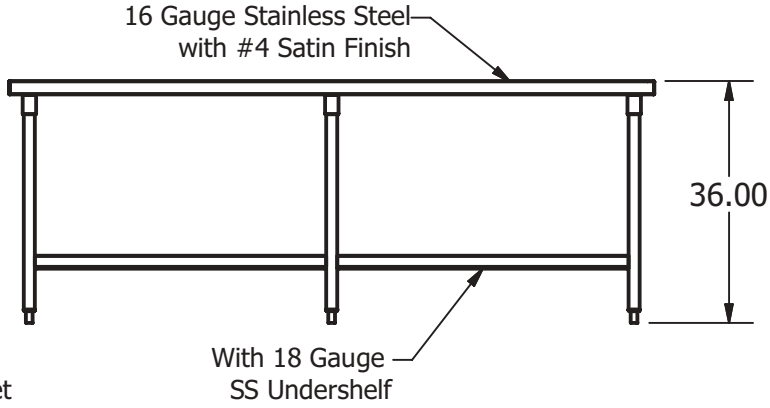

Features:

* Work table tops are constructed of 16 Gauge 304 Stainless Steel with #4 Satin Finish
* Tables have a 14 gauge heavy duty understructure
* With an 18 gauge stainless steel undershelf
* 1 5/8" Stainless steel round tube legs with SS adjustable feet
* Table working heights are 36"

Options:	Model Number	U/M
Adjustable Flange Feet	CHGA10-0854	each
Casters, (without brake)	CHGC23-1450	each
Casters, (with brake)	CHGC23-1451	each
15" x 20" Drawer Assembly w/ Plastic Pan	SDA152006P	each
15" x 20" Drawer Assembly w/ SS Pan	SDA152006S	each
20" x 20" Drawer Assembly w/ Plastic Pan	SDA202006P	each
20" x 20" Drawer Assembly w/ SS Pan	SDA202006S	each
Lower Table Height (State table work surface height)	LTH001	Lot

Stainless Steel Work Tables

Island Series - Table Lengths (15” to 138”)





Four Leg Island Tables with Undershelf

Length	24” Wide Model	30” Wide Model	33” Wide Model	36” Wide Model
15”	WKT 1524 IS	WKT 1530 IS	WKT1533 IS	WKT1536 IS
18”	WKT 1824 IS	WKT 1830 IS	WKT1833 IS	WKT1836 IS
21”	WKT 2124 IS	WKT 2130 IS	WKT2133 IS	WKT2136 IS
24”	WKT 2424 IS	WKT 2430 IS	WKT2433 IS	WKT2436 IS
27”	WKT 2724 IS	WKT 2730 IS	WKT2733 IS	WKT2736 IS
30”	WKT 3024 IS	WKT 3030 IS	WKT3033 IS	WKT3036 IS
33”	WKT 3324 IS	WKT 3330 IS	WKT3333 IS	WKT3336 IS
36”	WKT 3624 IS	WKT 3630 IS	WKT3633 IS	WKT3636 IS
42”	WKT 4224 IS	WKT 4230 IS	WKT4233 IS	WKT4236 IS
48”	WKT 4824 IS	WKT 4830 IS	WKT4833 IS	WKT4836 IS
54”	WKT 5424 IS	WKT 5430 IS	WKT5433 IS	WKT5436 IS
60”	WKT 6024 IS	WKT 6030 IS	WKT6033 IS	WKT6036 IS
66”	WKT 6624 IS	WKT 6630 IS	WKT6633 IS	WKT6636 IS
72”	WKT 7224 IS	WKT 7230 IS	WKT7233 IS	WKT7236 IS

Six Leg Island Tables with Undershelf

Length	24” Wide Model	30” Wide Model	33” Wide Model	36” Wide Model
72”	WKT 67224 IS	WKT67230IS	WKT67233IS	WKT67236IS
78”	WKT 7824 IS	WKT 7830IS	WKT 7833IS	WKT 7836IS
84”	WKT 8424 IS	WKT 8430IS	WKT 8433IS	WKT 8436IS
90”	WKT 9024 IS	WKT 9030IS	WKT 9033IS	WKT 9036IS
96”	WKT 9624 IS	WKT 9630IS	WKT 9633IS	WKT 9636IS
102”	WKT 10224 IS	WKT10230IS	WKT10233IS	WKT10236IS
108”	WKT 10824 IS	WKT10830IS	WKT10833IS	WKT10836IS
114”	WKT 11424 IS	WKT11430IS	WKT 11433IS	WKT11436 IS
120”	WKT 12024 IS	WKT12030IS	WKT12033IS	WKT12036IS
126”	WKT 12624 IS	WKT12630IS	WKT12633IS	WKT12636IS
132”	WKT 13224 IS	WKT13230IS	WKT13233IS	WKT13236IS
138”	WKT 13824 IS	WKT13830IS	WKT13833IS	WKT13836IS

“Custom Configurations Available”

Phone 888.618.2122 Fax 503.397.9596 E-mail info@pacificstainless.com

Pacific Stainless PRODUCTS, INC.

CMA
RESTAURANT SUPPLY & DESIGN, INC.

Submittal Sheet

04/21/2026

ITEM# 100 - POT RACK (1 EA REQ'D)

Pacific Stainless PRT-84-TMS

Table Mounted Triple Bar Rectangular Pot Rack with Shelf, 84"L x 24"W, 16/304 stainless shelf, table mounted with 1-5/8" stainless tube legs, includes (24) double pot hooks, NSF, Made in USA

Triple Bar - Table Mounted
Part # - PRT-##TMS

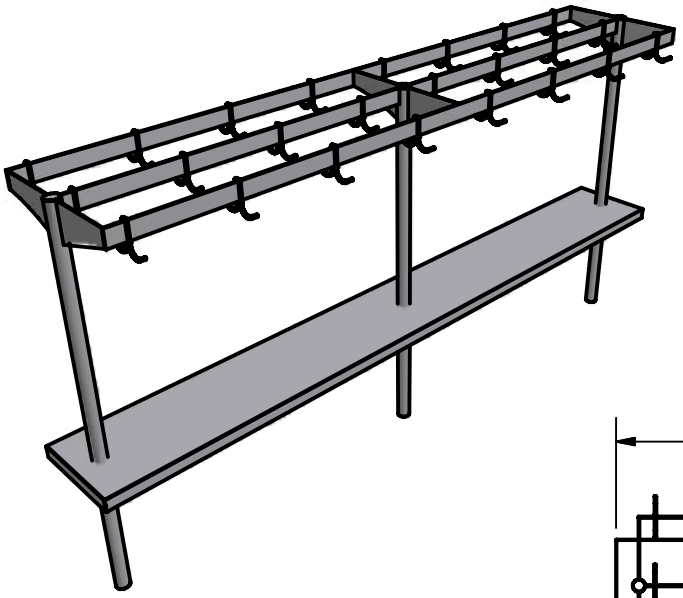

Model Shown:

PRT-96-TMS

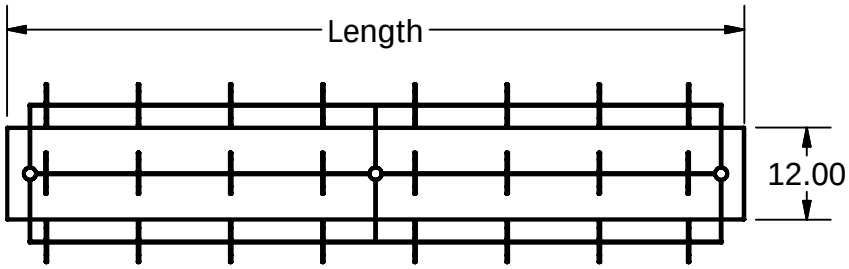

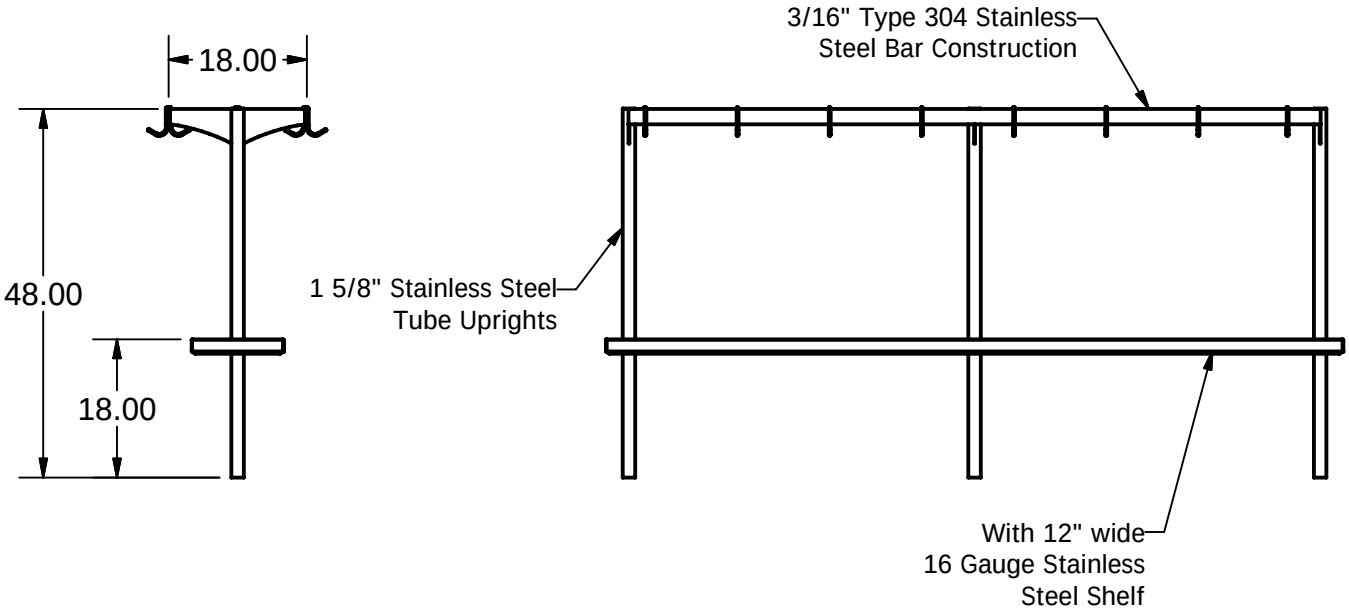

Features:

* 3/16" Type 304 Stainless Steel bar construction
* 1 5/8" Stainless Steel Tube uprights
* With 12" wide 16 gauge Stainless Steel Shelf
* Length relates to the length of the table the rack fits

Pot Racks

Ceiling and Table Mount - Rack Lengths (48” to 144”)



Table Mount without Shelf

	SIZE	MODEL
Triple Bar	**48”**	PRT- 48 TM
	60”	PRT- 60 TM
	72”	PRT- 72 TM
	84”	PRT- 84 TM
	96”	PRT- 96 TM
	108”	PRT- 108 TM
	120”	PRT- 120 TM
	132”	PRT- 132 TM
	144”	PRT- 144 TM

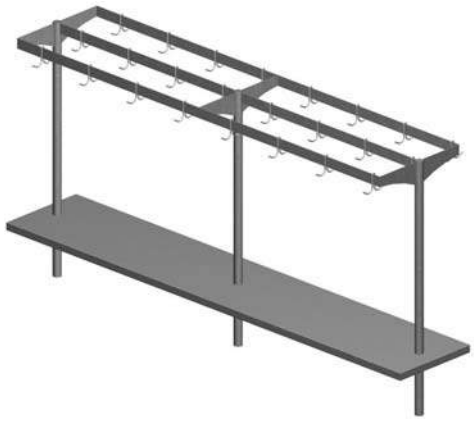

Table Mount with Shelf

	SIZE	MODEL
Triple Bar	**48”**	PRT- 48 TMS
	60”	PRT- 60 TMS
	72”	PRT- 72 TMS
	84”	PRT- 84 TMS
	96”	PRT- 96 TMS
	108”	PRT- 108 TMS
	120”	PRT- 120 TMS
	132”	PRT- 132 TMS
	144”	PRT- 144 TMS

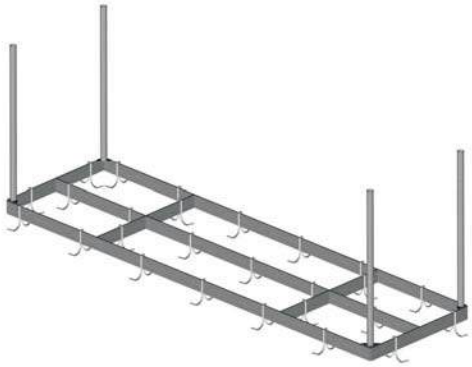

Ceiling Mount

	SIZE	MODEL
Triple Bar	**48”**	PRT- 48 CM
	60”	PRT- 60 CM
	72”	PRT- 72 CM
	84”	PRT- 84 CM
	96”	PRT- 96 CM
	108”	PRT- 108 CM
	120”	PRT- 120 CM
	132”	PRT- 132 CM
	144”	PRT- 144 CM

Phone 888.618.2122 Fax 503.646.2348 E-mail info@pacificstainless.com

CMA
RESTAURANT SUPPLY & DESIGN, INC.

Submittal Sheet

04/21/2026

ITEM# 101 - SHELVING UNIT, WITH METAL POST (1 EA REQ'D)

Metro PR-243674K3-S-4

Super Erecta Pro® Starter Unit, 24"W x 36"D x 74"H, (4) corrosion resistant shelves with removable polymer shelf mats, (4) bags of split sleeves, (4) posts, NSF

The spec sheet for this item can be viewed on item 5)

ACCESSORIES

Mfr	Qty	Model	Spec
Component Hardware	4	CMT2-5PBB	Caster, threaded stem, swivel, medium duty, 5" diameter, with ball bearing, side brake, 250 lb. load capacity, blue polyurethane wheel

CMA
RESTAURANT SUPPLY & DESIGN, INC.

Submittal Sheet

04/21/2026

ITEM# 102 - CHECK IN SS WORKTABLE (1 EA REQ'D)

Pacific Stainless CUSTOM

Work Table, 54"W x 24"D, Series A, 16/304 stainless top with backsplash, 1" x 6", 14 gauge galvanized U-Channels, stainless undershelf welded to (4) each 1-5/8" stainless tube legs with stainless adjustable feet, fully assembled, NSF, Made in USA

The spec sheet for this item can be viewed on item 53)